C O M P A T®

Service Manual

199235 Enteral Delivery Pump with Dose Limit and Memory

199240 Enteral Delivery Pump with Dose Limit and Memory, No Hold Alarm

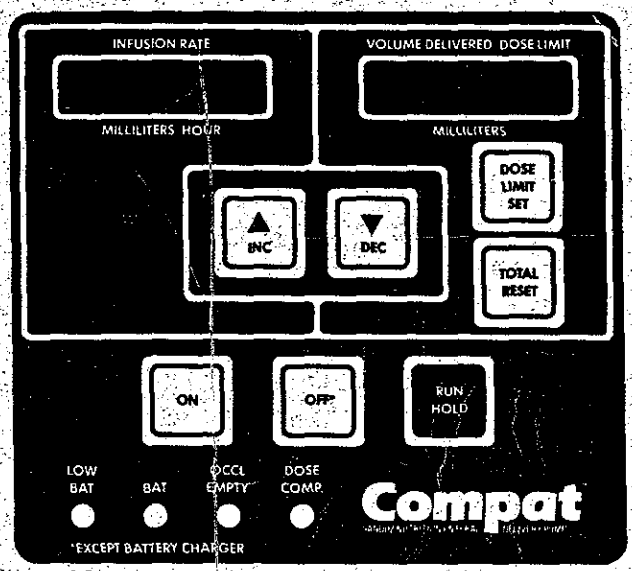

Compat®

SANDOZ NUTRITION ENTERAL DELIVERY PUMP

Compat Pump Service Manual
199235/199240
Upgrade Version

This service manual is to be used with the following Compat Enteral Feeding Pumps having software revision 3.XX.

199235 - Compat Enteral Feeding Pump with Dose Limit and Memory. (software revision 3.XX)

199240 - Compat Enteral Feeding Pump with Dose Limit and Memory, No Hold Alarm. (software revision 3.XX)

These Pumps can be identified as follows:

- o Serial Number is 400000 or greater, OR
- o The presence of an "UPGRADE" label next to the serial number on the back of the pump.

For further identification, the software revision can be determined by following the procedure described in paragraph number 3 (Dose Complete Alarm Check And Software Revision Test Mode) on page 5-3 of this Service Manual.

Note: For pumps using previous software revision, refer to the second half of this manual. (blue pages)

TABLE OF CONTENTS

CHAPTER 1
INTRODUCTION. 1-1

Compat Enteral Feeding Pump. 1-1
Description. 1-1
Operation. 1-1
Specifications 1-3

CHAPTER 2
OPERATING INSTRUCTIONS. 2-1

Controls & Indicators. 2-1
How to Operate Unit. 2-2
Alarms 2-5

CHAPTER 3
ROUTINE MAINTENANCE 3-1

Cleaning 3-1
Disinfecting 3-2
Functional Test Mode 3-2
Display Test Mode. 3-3
Motor Speed Test 3-3
Occlusion Alarm Test 3-3
Memory Test. 3-3

CHAPTER 4
QUANTITATIVE SYSTEM TEST. 4-1

Flow Rate Accuracy Test. 4-1
Electronics Test 4-1
Enter Test Mode 4-2
Check Numerical Displays. 4-2
Check Drop Sensor 4-2
Check Keypad Keys 4-2
Check Audible Alarm 4-2
Check AC/Battery Sensing. 4-2
Check Low Battery Sensing 4-2
Electrical Measurements 4-3

CHAPTER 5
THEORY OF OPERATION 5-1

General. 5-1
Software 5-1
Hardware 5-5

CHAPTER 6
TROUBLESHOOTING 6-1

TABLE OF CONTENTS (CONTINUED)

APPENDIX A

Printed Circuit Board Schematics. A-1

Printed Circuit Board Layout A-3

Printed Circuit Board Parts List. A-4

Wiring Harnesses. A-7

Wiring Harness - Parts list A-10

Mechanical Assembly A-11

Mechanical Assembly Parts List. A-13

LIST OF ILLUSTRATIONS

Figure No.	Title	Page
2-1	Front Panel	2-1
2-2	Activate Pump	2-2
2-3	Installation of Drip Chamber	2-2
2-4	Silicone Tubing Placement	2-3
2-5	Pump Adaptor/PVC Tubing Placement	2-3
5-1	Logical Block Diagram	5-6

CHAPTER 1
INTRODUCTION

This service manual is to be used with the following Compat Enteral Feeding Pumps:

199235 - Compat Enteral Feeding Pump with Dose Limit and Memory. (software rev. 3.XX)
199240 - Compat Enteral Feeding Pump with Dose Limit and Memory, No Hold Alarm. (software rev. 3.XX)

Description

The pump is of a peristaltic, volumetric, and rotary design. It regulates the flow rate of enteral feeding formulas. The pump is an easy to use and versatile device for the administration of all enteral formula solutions. The salient features of the pump are as follows:

* Ease of use
* Adjustable feeding rates from 1 to 295 ml/hr (1 ml/hr increments)
* Settable Dose Limit for intermediate feeding from 5 ml to 9995 ml (5 ml increments) with 3 selectable dose complete alarm modes
* Separate Rate and Total Volume/Dose Limit/Accumulated Volume display
* Memory retention of Infusion Rate, Dose Limit, Volume Delivered and Accumulated Volume.
* Light weight and portability
* Easily understood alarm signals
* Low occlusion pressure
* Self-test modes
* Built in pole clamp
* AC and Battery operation
* Ease of cleaning

Operation

The pump uses a stepping motor to pump enteral feeding formulas. The user establishes a feeding rate by pressing the INCREMENT (INC) and DECREMENT (DEC) keys on the control panel, changing the INFUSION RATE display. A microprocessor then calculates the required motor speed(number of motor steps for each periodic cycle). When the operator presses the RUN/HOLD key, the unit begins to pump fluid through a tubing set, producing drops in the drip chamber. (On model 199235, leaving the pump in the rate setting (or "hold") mode for more than 2-1/2 minutes will cause an alarm. The alarm is a blinking LED and a buzzer sound.)

As the pump runs, it continuously updates the VOLUME DELIVERED display and the internal Accumulated Volume variable and monitors the rate at which the drops fall through the drip chamber. If this rate is insufficient, the pump signals an OCCL/EMPTY condition by lighting an LED and sounding the alarm. The operator may stop or start the feeding at any time by pressing the RUN/HOLD Key. He may then clear the VOLUME DELIVERED display by pressing TOTAL RESET. If the DOSE LIMIT mode is selected (DOSE LIMIT set point greater than 0), the microprocessor monitors the VOLUME DELIVERED against the DOSE LIMIT set point. When VOLUME DELIVERED is equal to DOSE LIMIT set, the pump will stop, the DOSE COMPlete LED will continuously flash and one of the Dose Complete alarm modes is sounded. Three Dose Complete alarm modes are available to the user:

Mode 1 - Pump is stopped and beeps twice
Mode 2 - Pump is stopped, beeps twice and beeps at 5 minute intervals
Mode 3 - Pump is stopped and beeps continuously

The pump has a built in memory for retaining pump settings. If the unit is turned off at any time, the Infusion Rate, Dose Limit, Volume Delivered and Accumulated Volume are automatically stored. Once the pump is turned ON, the previously stored settings are automatically recalled.

The pump uses a rechargeable lead-acid battery to allow portable operation. The battery charge level is monitored by the microprocessor, which lights the LOW BAT LED approximately fifteen minutes before the pump alarms and stops.

A summary of the alarm conditions are as follows:

Battery Operation (normal)...	Only the green LED is lit.
Low Battery Condition.....	LED lights for 15 minutes, then flashes while unit beeps.
Occlusion.....	LED flashes and unit beeps.
Free Flow.....	Display flashes "FrE FLO" and unit beeps.
Dose Complete.....	Mode 1 - "DOSE COMP" LED flashes, pump is stopped and beeps twice
	Mode 2 - "DOSE COMP" LED flashes, pump is stopped, beeps twice and beeps at 5 minute intervals
	Mode 3 - "DOSE COMP" LED flashes, pump is stopped and beeps continuously

Specifications

Type of Device.....Volumetric enteral formula feeding pump.

Mechanism.....Rotary peristaltic.

Operating Rates.....Infusion Rate - 1-295 ml/hr in 1 ml/hr increments. Dose Limit 0-9995 ml in 5 ml increments (0 Dose Limit implies no dose limit monitoring by pump).

Memory.....Memory Retention of infusion rate, dose limit, volume delivered and accumulated volume even if unit is turned off.

Accuracy.....+/-10% of selected flow rate.

Occlusion Pressure.....15 psi, maximum.

Battery.....-Sealed lead-acid.
-Rechargeable, no memory.
-Operating time 8 hours at 100 ml/hr (nominal).
-Automatically recharges when unit is plugged in. Recharge time from complete discharge to full charge is 12 hours.
-Self discharge: charge unit fully every six months.

Dimensions.....7.4"H x 9.5"W x 5.3"D.

Weight.....5.7 lbs.

Case Material.....Fire resistant plastic.

Power Requirement.....115 VAC, 187mA, 60Hz.

Fuses.....Line: 1/4a, 250v, 3AG type.
Battery: 2a board mount.

CHAPTER 2
OPERATING INSTRUCTIONS

Controls & Indicators

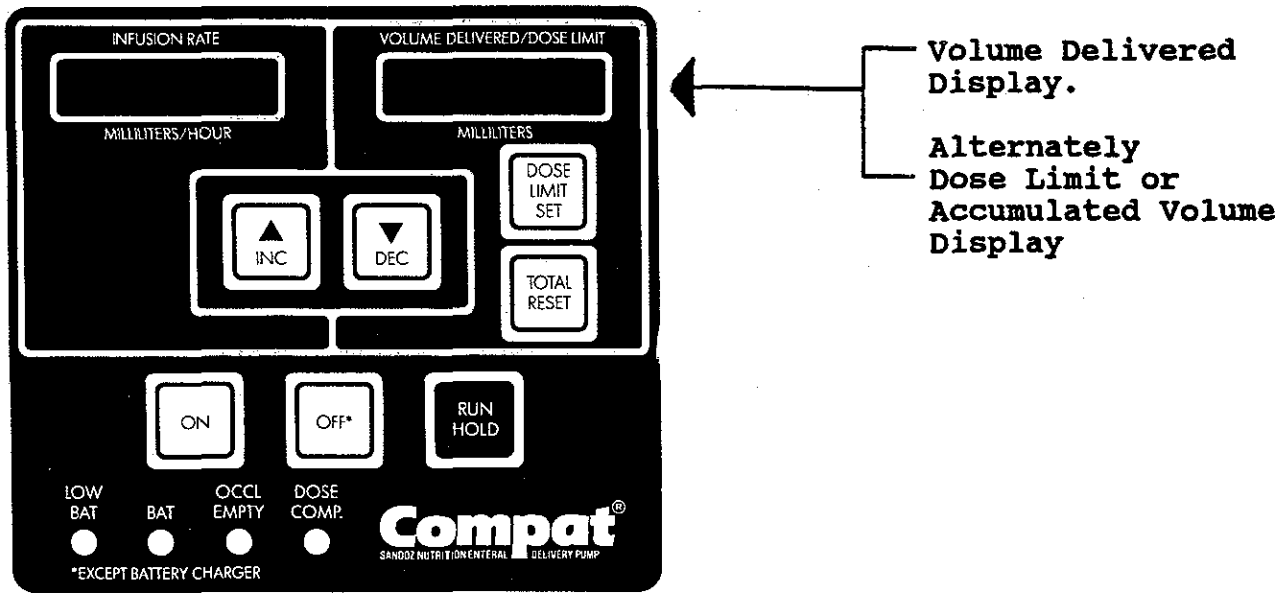

Figure 2-1 Front Panel

1. **On,** Applies Power to unit.

2. **Off,** Turns power off except to battery charger.

3. **Inc,** Increases flow rate when pressed and held. Increases dose after Dose Limit Set Key has been pressed.

4. **Dec,** Decreases flow rate when pressed and held. Decreases dose after Dose Limit Set Key has been pressed.

5. **Run/Hold,** Alternately starts and stops unit. Corrects alarm condition and restarts unit when pressed twice.

6. **Total Reset,** Resets volume delivered display to 0.

7. **Infusion Rate Display,** Indicates delivery rate.

8. **Dose Limit Set,** Displays dose limit and allows dose to be set.

9. **Volume Delivered Display,** Constantly indicates total volume delivered.

   Dose Limit Display, Indicates Dose Limit Volume set when Dose Limit Set Key is pressed during operation.

   Accumulated Volume Display, Indicates Accumulated Volume when Dose Limit Set Key is pressed and held for more than 5 seconds.

How To Operate Unit

1. Plug the power cord into a 115VAC., 60 Hz. three wire grounded outlet.

2. Press ON - alarm will sound briefly. Remember, the pump has memory and will automatically recall the previous parameter settings. (Figure 2-2)

3. Check Infusion Rate. If change is desired, press INC or DEC to change rate setting. (Figure 2-2)

4. Check Dose Limit by pressing DOSE LIMIT SET. If change is desired, press INC or DEC within the next 3 seconds to change setting limit. Zero Dose Limit implies no dose limit monitoring by pump.

5. Press TOTAL RESET to clear Total Volume, if desired.

6. Insert drip chamber into drip chamber brackets. (Figure 2-3)

7. Open roller clamp. Expel air from tubing. Close clamp.

8. Stretch silicone tubing around rotor. (Figure 2-4)
   Insert pump adaptor into bridge. (Figure 2-5)

9. Place tubing into tubing guide. (Figure 2-5)

10. Attach pump set to patient's feeding tube.

11. Open roller clamp.

12. Press RUN/HOLD to start pump.

13. "OFF" will turn off the pump at any time. (Infusion Rate, Total Dose Set, Volume Delivered and Accumulated Volume are retained.)

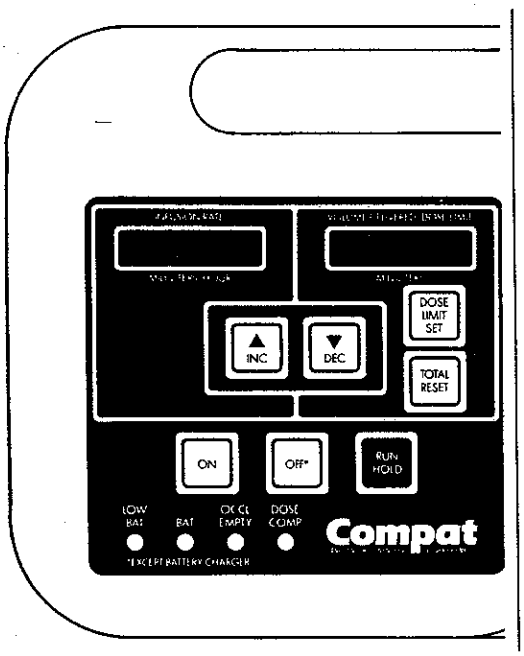

Figure 2-2 Activate Pump; Set Flow Rate.

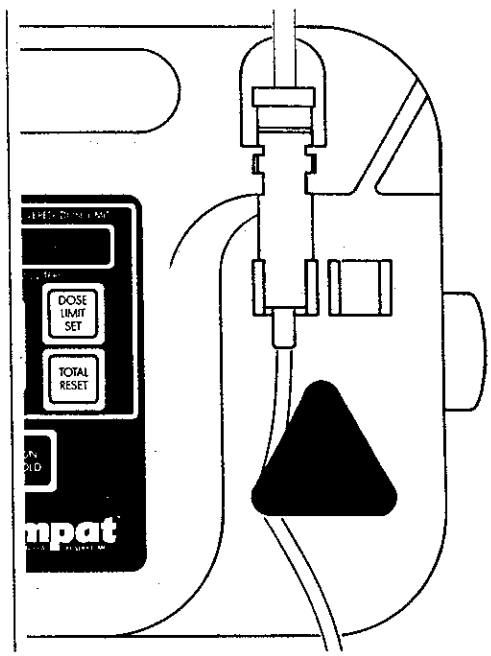

Figure 2-3 Insert Pump Set Drip Chamber.

TO CHANGE RATE OR DOSE LIMIT:

1. Press RUN/HOLD to stop pump.
2. Select new Infusion Rate by pressing INC or DEC.
3. Select new Dose Limit by pressing DOSE LIMIT SET and then press INC or DEC within next 3 seconds.
4. Press TOTAL RESET to clear Volume Delivered, if desired.
5. Press RUN/HOLD to restart pump.

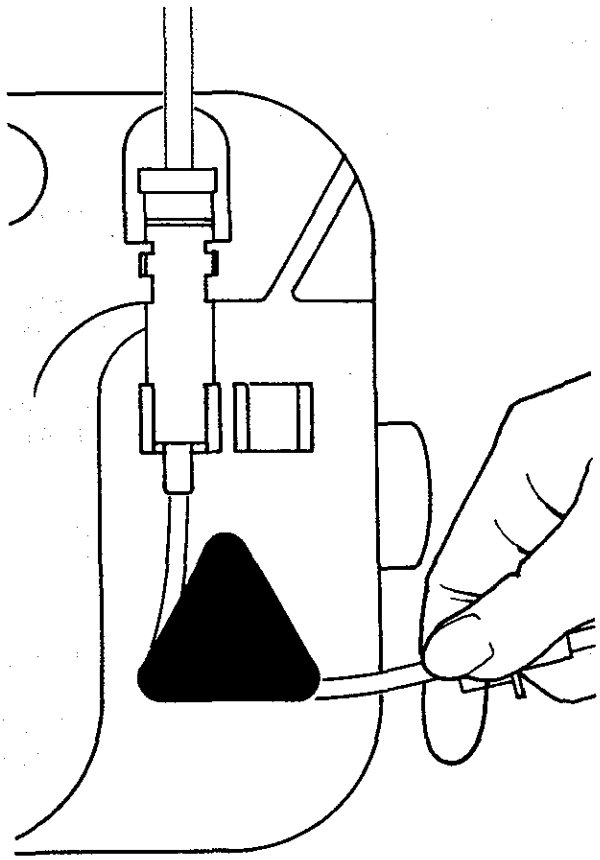

Figure 2-4 Assemble Silicone Tubing Around Rotor.

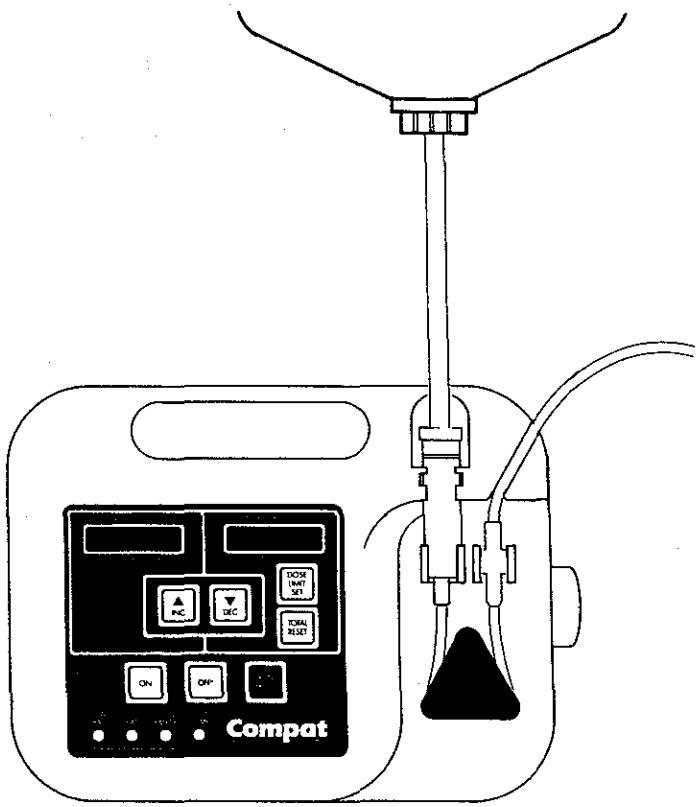

Figure 2-5 Pump Adaptor Placement. PVC Tubing Placement.

TO VIEW DOSE LIMIT:

1. Press DOSE LIMIT SET. Dose Limit will be displayed for a few seconds.

TO CLEAR VOLUME DELIVERED:

1. Press RUN/HOLD to stop pump.
2. Press TOTAL RESET to clear Volume Delivered (Note: Accumulated Volume is retained).
3. Press RUN/HOLD to restart pump.

TO VIEW OR CLEAR ACCUMULATED VOLUME:

1. Press RUN/HOLD to stop pump.
2. Press and hold DOSE LIMIT SET for 5 seconds. "tot VOL" and Accumulated Volume will be displayed for 10 seconds.
3. To clear Accumulated Volume, press TOTAL RESET within the 10 seconds. (Note: Volume Delivered is retained).
4. Press RUN/HOLD to restart pump.

TO VIEW OR CHANGE DOSE COMPLETE ALARM MODE:

Three alarm modes are available when dose is complete:

Mode 1 - Pump is stopped and beeps twice
Mode 2 - Pump is stopped, beeps twice and beeps at 5 minute intervals
Mode 3 - Pump is stopped and beeps continuously

1. Press and hold INC and DEC for 5 seconds, the Rate and Volume Delivered displays should show "888" and "8888" respectively.

2. Press and hold INC and DEC again for 5 seconds, the Rate display will show "012" and the Volume Delivered displays will show "3456".

3. Press and hold INC and DEC once again for 5 seconds, the Rate display will show the current alarm mode. (1r, 2r, or 3r) (disregard The Volume Delivered display)

4. If change is desired, press INC or DEC to select desired mode.

5. Press RUN/HOLD to save new alarm mode. A short beep will sound to confirm new mode. (Note: If RUN/HOLD is not pressed, new alarm mode will not be saved.)

6. Turn pump off by pressing OFF.

7. Pump is now set to operate in the new alarm mode.

Alarms

BATtery Light:

Leave the pump plugged into an AC outlet whenever possible. When operated on battery power, the BAT LED will be lit. This is normal and no alarm will sound.

LOW BATtery Light:

This LED will come on when the pump has approximately 15 minutes of battery life left. After 15 minutes, this LED will flash and the audible alarm will sound. The pump will stop. If battery operation mode continues beyond this point, the unit will turn off.

Whenever the LOW BAT light is on, plug the pump into an AC outlet. Feeding will continue normally, and the battery will begin to charge.

To avoid degrading battery life, it is important not to run down the battery.

OCCL/EMPTY Light:

The OCCL/EMPTY alarm is activated under the following conditions:

1. Formula container is empty.
2. An occlusion has caused delivery to stop.
3. The pump is left on hold for more than 2-1/2 minutes (model 199235 only).
4. DRIP CHAMBER is over filled.
5. DRIP CHAMBER walls are coated with solution.
6. Drop sensor lenses in drip chamber guide need cleaning.
7. DRIP CHAMBER is improperly placed.
8. Intense light is falling on the Drop sensor.

Correct the cause of alarm, then press the RUN/HOLD key. This cancels the alarm and returns pump to the hold mode.

DOSE/COMPlete Light:

This light will come on when the pump has delivered the preset volume or while in the DOSE LIMIT SET mode.

RATE CHANGE:

The alarm will sound if the user presses INC, DEC, or TOTAL RESET while the unit is running. No LED will light.

FREE FLOW:

The alarm will sound and a blinking "FrE" "FLO" is shown on the Rate and Volume Delivered displays when the pump detects a free flow condition.

Cleaning

Cleaning consists of removing any spillage from the pump housing, rotor, rollers, control panel, and drop sensor.

WARNING:

DISCONNECT THE PUMP FROM THE AC POWER SOURCE BEFORE CLEANING TO PREVENT ELECTRICAL SHOCK.

PROLONGED EXPOSURE TO ALCOHOL, HOUSEHOLD DETERGENTS OR STRONG CLEANSERS COULD RESULT IN DAMAGE TO THE PUMP HOUSING.

DO NOT IMMERSE PUMP IN CLEANING SOLUTION.

DO NOT AUTOCLAVE AND DO NOT USE STERILIZING SOLUTIONS.

1. Using a cloth or sponge, clean the pump housing and rollers with warm soapy water. Clean the drop sensor parts with soft cotton swabs and isopropyl alcohol.
2. Check that the pump rotor rollers rotate freely. If they do not rotate easily, clean them as described in steps 3-8.
3. Loosen the set screw with a 3/32" (0.094") Allen wrench and pull the pump rotor from its shaft.
4. Clean the rollers thoroughly with warm soapy water or isopropyl alcohol if necessary.
5. After cleaning, align pump rotor with the flat on the output shaft.
6. Push the rotor all the way on the shaft, so that it is approximately 0.050" (1/8 cm) from the surface of the case.
7. Tighten the set screw.
8. Use thread setting adhesive to prevent set screw from vibrating free.

Disinfecting

If it is necessary to disinfect the entire pump, the following is recommended:

GENERAL DISINFECTANTS:	Cidex (Arbrook, Inc.) Hibiclens (Stuart Pharmaceuticals) pHishex (Winthrop-Breon Labs) Isopropyl Alcohol

AIDS and Hepatitis

Disinfectants:	10% concentration of 5.25% sodium hypochlorite (Household bleach)

Tuberculosis

Disinfectants:	70% concentration of isopropyl alcohol.

After application of these disinfecting agents, allow to air dry. It should be noted that these recommendations should not be substituted for official procedures that may differ among institutions. To determine the proper procedure in a particular institution, contact the Infection Control Department.

DO NOT AUTOCLAVE **DO NOT IMMERSE PUMP IN CLEANING SOLUTIONS**

Functional Test Mode

This test checks operation of the motor, microcomputer, display, control panel, and drop sensor.

Perform the test as follows:

1. Press the ON key.
2. To enter test mode, press INC, then DEC and hold both down for five seconds. (The pump will run at a 120 ml/hr equivalent rate but the displays will read 888 ml/hr and 8888 ml). At this rate, the pump rotor will turn periodically such that it makes a full revolution in six run/stop cycles (12 second for 1 full revolution).
3. Press any key except ON or OFF. (Each time a key is pressed or a drop blocks the sensor, the motor stops, the alarm sounds, and all LEDS light.) Check each key.
4. Pass a pencil or finger through the Drop Sensor and look for all four LEDs to light and the alarm to beep.
5. Press the OFF key and hold momentarily to leave test mode.

NOTE:

Any failure indicates a service check must be performed to locate the malfunction.

Display Test Mode

Perform the test as follows:

1. Enter test mode as usual, then press and hold down INC and DEC again. The RATE display will change to 012 and the VOLUME display will change to 3456 while the motor runs at a 120 ml/hr rate.

2. Press any key except ON or OFF. Each time a key is pressed, the display will shift left one position.

3. Check for correct display of the digits 0 through 9 in every position.

4. Check that the LOW BAT, BAT, and DOSE COMPlete LEDs light when 1, 2 and 3 respectively, are in the left most digit position.

5. Check that the OCCL/EMPTY LED lights only when the drop sensor is blocked.

6. Press the OFF key and hold momentarily to leave test mode.

Motor Speed Test

Because of the digital nature of stepper motors, it is sufficient to measure one rate setting to verify correct motor operation. Check motor speed by measuring the time required for the pump motor to make ten revolutions at 120 ml/hr. This is most easily accomplished while in the Test Mode, as described above. At 120 ml/hr, ten revolutions take from 117 to 122 seconds.

Occlusion Alarm Test

Without the drip chamber in place, set the Rate to 295 ml/hr and press RUN/HOLD to start the pump. An occlusion alarm should occur after 7.5 revolutions of the rotor. As a second check, the Volume display should display "3" ml as the alarm occurs.

Memory Test

Press ON to turn the pump On. Select new Infusion Rate by pressing INC or DEC. Select new Dose Limit by pressing DOSE LIMIT SET and then press INC or DEC within next 3 seconds. Remember these settings. Press OFF then press ON. Verify that pump settings were recalled properly to the same values before the pump was turned OFF.

NOTE:

Any failure indicates a service check must be performed to locate the malfunction.

CHAPTER 4
QUANTITATIVE SYSTEM TEST

Flow Rate Accuracy Test

Perform the following procedure to ensure that the feeding formula system is operating accurately:

Equipment needed:

1. Calibrated stopwatch or timer
2. Approved pump set
3. Graduated metric cylinder (Pyrex brand by Corning Glass, Series #3022 or equivalent.) The required specifications are:

   Capacity..... 500 ml
   Resolution..... 5.0 ml
   Total Error (full range). 2.6 ml, max.

1. Set up pump for normal operation, as outlined on page Water may be used for fluid.
2. Be sure not to overfill drip chamber. Remove bubbles and fill entire line with fluid.
3. Adjust bag height so that fluid level is 24" (610 mm) above center of pump rotor.
4. Turn on pump and set 200 ml/hr rate.
5. Place distal end of tubing into empty cylinder. Adjust distal end to 24" (610 mm) below center of pump rotor. Start stopwatch at the same time as you press RUN/HOLD.
6. Run test for exactly two hours.
7. Check volume of fluid, it should be within +/-10% (360ml - 440ml).

Electronics Test

This procedure checks system operation in detail.

Equipment needed:

1. Digital Storage Scope (Tektronix 2230 or equivalent)
2. DMM (Beckman DM10 or equivalent)
3. Variable voltage power supply (Power/Mate Corp. BPA 40 or equivalent)

WARNING

120 VAC IS PRESENT INSIDE PUMP. USE DUE CAUTION WHEN CASE IS OPEN. BE CAREFUL NOT TO DISCONNECT J1, J2, OR J3.

Electronics Test (Continued)

1. Enter Test Mode

   a) Plug the AC power cable into a 115 VAC receptacle.
   b) Install and fill a pump set
   c) Press the ON key
   d) Press the INC and the DEC keys and hold both for 5 seconds.

2. Check Numerical Displays

   a) While in Test Mode verify all display segments are lit uniformly, displaying "888" ml/hr and "8888" ml.

3. Check Drop Sensor

   a) While in Test Mode, verify that OCCL/EMPTY, LOW BAT, DOSE COMPLETE, and BAT LEDs blink and the alarm sounds for every drop passing sensors.

4. Check Keypad Keys

   a) In Test Mode, press each key (except On & OFF) several times and check for a beep with each press.

5. Check Audible Alarm

   a) Exit Test Mode by turning pump off then on again Remove drip chamber.
   b) Set Rate at 295 ml/hr and start pump (press RUN/HOLD)
   c) At 7.5 revolutions of the rotor, the audible alarm should begin beeping and the Volume/Dose display should read "3" ml.
   d) While the alarm is sounding, adjust the volume knob mounted to the rear of the case and verify that the sound level varies.

6. Check AC/Battery Sensing

   a) With the pump in Hold (or Run) Mode and the AC line cord plugged into an outlet, verify that the BAT LED is extinguished.
   b) Remove the AC line cord from the outlet and verify that the BAT LED lights within a few seconds (if battery is not fully charged, it may take up to a few minutes to charge the battery up to the threshold point).

7. Check Low Battery Sensing

   a) With the pump turned off, remove the (+) connection from the battery
   b) Adjust the variable power supply to 12VDC, turn supply off, then connect (+) lead to D10 cathode and (-) lead to D5 anode(GND).
   c) Turn supply on, and press ON.
   d) Verify the LOW BAT LED is off
   e) Decrease the voltage gradually and note the voltage when LOW BAT illuminates. The trip point should be in the range 10.8 - 11.6 VDC.

8. Electrical Measurements

There are no adjustments present on the PC board. However, proper circuit performance may be checked by measuring voltages present on the PC board. (The pump should be plugged into a proper AC outlet and should be set in the Functional Test Mode, with no set installed.) The anode of D5 or D7 provides a convenient DC ground point. The battery should be fully charged prior to measurements.

Nominal Voltages Present at:	
a) Full wave rectified input (Cathode D4)	16.5 VDC
b) V+ (Cathode D8)	15.7 VDC
c) B+ (Cathode D10)	13.2 VDC
d) Input Voltage to 5V DC to DC Converter (U16 pin 7)	15.7 VDC
e) 5V DC to DC Converter output (U16 pin 10)	5.0 VDC
f) Reference Voltage (U15 pin 5)	2.5 VDC
g) Battery Charger Voltage (Anode D10)	14.0 VDC
h) Drop Detector Source Modulation (U2 pin 5)	14 KHZ Sq. Wave 3.8V P-P
i) Drop Detector Receiver Tank Circuit (U2 pin 3)	14 KHZ
j) Drop Detector Output (U2 pin 8)	.03 VDC
k) Motor Drive Signals (U5 pin 6) pulse train in test mode (30 pulses) repeating every 2 seconds	15.5V P-P 24 mS between each pulse

CHAPTER 5
THEORY OF OPERATION

General

The pump controller is a single printed circuit board that provides electronic control of a rotary stepper motor which drives a peristaltic fluid pump. The pump controller also provides an electronic interface to the keypad and display panel, from which INFUSION RATE and DOSE LIMIT may be specified and system operation may be monitored.

The pump controller and associated components are interconnected by a system wiring harness and are housed in a standalone, portable chassis. Functional components external to the pump controller include: motor, keypad, Display panel, drop sensor, audible alarm, volume control, battery, AC power cord, transformer, and fuse.

Software Description

At turn-on, a reset pulse is generated to start the processor at a known address in the software. The processor then steps sequentially through the software performing different tests (ROM checksum, RAM test, EEPROM Parameter redundancy test, etc..) and system initialization. Any errors found would cause an alarm to sound and the pump to turn itself OFF. At the successful completion of these tests, Previous data for INFUSION RATE, VOLUME DELIVERED, DOSE LIMIT and ACCUMULATED VOLUME are read from EEPROM, validated and displayed. The pump then generates one pulse of the audible alarm signal and is put in the HOLD mode.

At entry to Hold Mode, the motor is turned off. The processor continually scans the keypad, flow sensor, battery status and sequentially refreshes the displays. Input from the keypad is used to change the parameters. The user may enter a new Infusion Rate (via INC or DEC), set a new Dose Limit value (via DOSE LIMIT SET), reset the Volume Delivered counter (via Total Reset) or reset the Accumulated Volume (via Total Reset). RATE may be set between 1 and 295 ml/hr and DOSE LIMIT between 0 and 9995 ml. A DOSE LIMIT of 0 disables the DOSE LIMIT function.

Volume Delivered can vary from 0 to 9999 ml (if the volume delivered exceeds 9999 ml, it will wrap around back to 0 ml).

Accumulated Volume can vary from 0 to 9999 ml (if the accumulated volume exceeds 9999 ml, it will wrap around back to 0 ml).

On Model 199235, if the unit is kept in the HOLD state without any key activity for 2.5 minutes, the system sounds an alarm. This is used as a reminder to the operator that Run Mode has not been initiated. Depressing the RUN/HOLD button resets the alarm.

On Model 199240, the system can be left in HOLD mode indefinitely.

Software (Continued)

The RUN mode is entered from the HOLD mode by pressing the RUN/HOLD key. Pressing the RUN/HOLD key again returns the system to the HOLD mode. In RUN mode, the motor is driven is driven in an on/off manner with four signals pulsed sequentially to turn the motor in a counterclockwise direction. The time between pulses is set to 6 ms. The pulse train repeats periodically (every 2 seconds) independent of the programmed rate. The number of pulses in a pulse train is equal to the programmed pump rate. The motor will run at the appropriate speed for an equivalent 2 ml during which time the Drop Sensor is disabled to allow any final priming of the feeding set.
After this initial period is over, the software begins monitoring the Drop Sensor and counting each drop. The flow sensor counts the number of drops delivered during each milliliter. Typically, the number of drops per 1 ml formed in a drip chamber can vary from approximately 10 drops to approximately 40 drops depending on product properties (viscosity, surface tension, etc..) as well as drip chamber nozzle size and geometry. To allow for these variations, a threshold of 5 drops per ml minimum and 50 drops per ml maximum has been established. The microcontroller in the pump performs a test at each 1 ml time interval: If the number of drops was within this established range (5-50), the motor continues to run. If the number of drops was below the minimum count (5) an OCCLUSION/EMPTY alarm mode is entered. Normally an empty feeding bag will cause this condition. If the number of drops was above the maximum count (50), a free flow alarm mode is entered .

If a Dose Limit has been set, the microcomputer continuously compares Volume Delivered to the Dose Limit and, if equal to or greater than Dose Limit, a Dose Complete Alarm occurs, the pump will stop, the DOSE COMPlete LED will continuously flash and one of the Dose Complete alarm modes is sounded. Three Dose Complete alarm modes are available:
Mode 1 - Pump is stopped and beeps twice
Mode 2 - Pump is stopped, beeps twice and beeps at 5 minute intervals
Mode 3 - Pump is stopped and beeps continuously

The battery voltage is checked and the LOW BAT LED is lit when the voltage drops below a specified level. If the voltage remains low for 15 minutes, a Low Batt Alarm is generated and pumping stops.

If DOSE LIMIT SET is pressed during Run, the current Dose Limit value is displayed for a few seconds on the Volume/Dose display. If RUN/HOLD is pressed, pumping stops and the unit enters Hold Mode. If any other key is pressed during Run a beep will occur signalling an invalid key press and the key is ignored.

While the pump is in Hold Mode, pressing TOTAL RESET will reset Volume Delivered to zero (Accumulated Volume is not affected).

While the pump is in Hold Mode, if DOSE LIMIT SET is pressed and held for 5 seconds, "tot VOL" and the Accumulated Volume will be displayed for 10 seconds. While viewing this Accumulated Volume, pressing TOTAL RESET will reset the Accumulated Volume to zero (Volume Delivered is not affected).

In Alarm Mode the controller stops the motor, flashes both displays, beeps the alarm at a 1Hz rate, and flashes the appropriate indicator LED. The LEDs which are active flash in time with the displays and indicate the cause of the alarm. Note that the pump is alarming for low battery if both the BAT and LOW BAT LEDs are on (BAT is merely an indication that the AC line cord is not plugged into a receptacle.) When RUN/HOLD is pressed, the pump silences the audible alarm and enters Hold Mode.

The pump has built in test modes. Three test modes are available:

1) Functional Test Mode - This test functionally checks the motor, microcomputer, display, keypad and drop detecting circuit. To enter test mode, press INC and DEC for few seconds. The pump will run at a 120 ml/hr rate but the displays read 888 ml/hr and 8888 ml. Each time a key is pressed (except ON) or when the sensor is interrupted, the motor stops, all alarm LED's light, and the audible alarm beeps. Press the OFF key and hold momentarily to leave this test mode.

2) Display test mode - This test checks for short-circuits between display elements. It is primarily useful to the manufacturer. To perform this test, enter the Functional Test Mode as above, then press and hold down INC and DEC again. The display will read 012 ml/hr and 3456 ml, while the motor runs at a 120 ml/hr rate. Each time a key is pressed (except ON) the display will shift left one position. The digits 0 through 9 are all tested. Check for correct display of ever digit in every position. Check that the LOW BAT, DOSE LIMIT and BAT LED's light when 1, 2, and 3, respectively, are in the left most digit position. Check that the OCCL/EMPTY LED lights only when the drop sensor IR beam is blocked. Press the OFF key and hold momentarily to leave this test mode.

3) Dose Complete Alarm Mode check and Software Revision test mode - This test displays the current Dose Complete Alarm Mode and software revision being used in the pump. The software revision display is primarily useful to the manufacturer. To perform this test, enter the Functional Test Mode as above, then enter the Display test mode as above, then press and hold down INC and DEC again. The Rate Display will show a number followed by "r" and the Volume Delivered Display will show the software revision being used by the pump.

Example:	RATE display	VOLUME DELIVERED display
	" 2r"	" 305"

would indicate that the pump is set to operate in the "Dose Complete Alarm Mode 2" as described above and the software revision being used is 3.05. Press the OFF key and hold momentarily to leave this test mode.

Software (Continued)

If at anytime the OFF key is depressed, it is sensed by the processor. The processor then tests three parameters; INFUSION RATE, VOLUME DELIVERED, DOSE LIMIT and ACCUMULATED VOLUME. If the value stored in EEPROM is the same, it checks the next value. If any of the parameters have changed, the EEPROM is updated. Once all of the parameters are tested, the processor turns the system OFF.

Data stored in the EEPROM will remain indefinitely even if the AC power and the battery both are removed.

Hardware Description

The Enteral Feeding Pump is a microcomputer based system designed to deliver precise rates of liquid nutrient selected by the operator.

Figure 1 shows a block diagram of the system. For more detailed information, refer to the schematics in Appendix A-1.

Power for the pump is provided by either line voltage or the internal lead acid battery. The battery is recharged by the line voltage independent of the operation of the pump. The line voltage is stepped down by means of the transformer and full wave rectified and filtered by D4-D7 and C9. This raw DC voltage is used to power the battery charger (U15), stepper motor driver (U5) and the on/off flip flop (U3). When line voltage is present transistor Q8 is on (saturated) providing a logic zero to the microcomputer, indicating that AC voltage is present to operate the pump and charge the lead acid battery. The raw DC voltage is provided via D8 or D9 (whichever is greater). This allows the pump to automatically switch to battery operation if the AC line is disconnected.

The lead-acid battery is rated as a 12 volt, 1.2-1.3 amp-hour power source and is fused at 2 amps by F1 mounted to the PC board. The battery is charged by a constant voltage, current limited voltage regulator consisting of U15, Q5, CR1 and resistor R27. The voltage reference and 1% (R28 and R29) resistors set the charge voltage on the cathode of D10 at approximately 13.5 volts and R27 sets the current limit to approximately 230 mA. CR1 provides a stable voltage reference of 2.5 volts. D10 isolates the charges circuits from the battery during battery operation of the pump.

A DC/DC converter steps down the nominal 12 vdc to +5vdc. A converter is used for greater efficiency to extend battery run time between chargings. The ON and OFF keys control 12 vdc power to the converter.

The converter provides +5 vdc power for the microcomputer, logic, EPROM and displays. When power is applied, the processor initializes all system functions. These system functions include internal variables and external displays. The motor is turned off and previous operating parameters are recalled from nonvolatile memory and displayed. Nonvolatile memory is EEPROM internal to the microcomputer.

The operating parameters which are saved in EEPROM are INFUSION RATE, VOLUME DELIVERED, DOSE LIMIT and ACCUMULATED VOLUME.

Infusion of nutrient is precisely controlled and displayed by the microcomputer. The nutrient is pumped by a stepper motor rotating at precise speeds controlled by signals from the microcomputer. The microcomputer sets the motor average speed relative to the INFUSION RATE. The INFUSION RATE, along with VOLUME DELIVERED are displayed on the two LED displays.

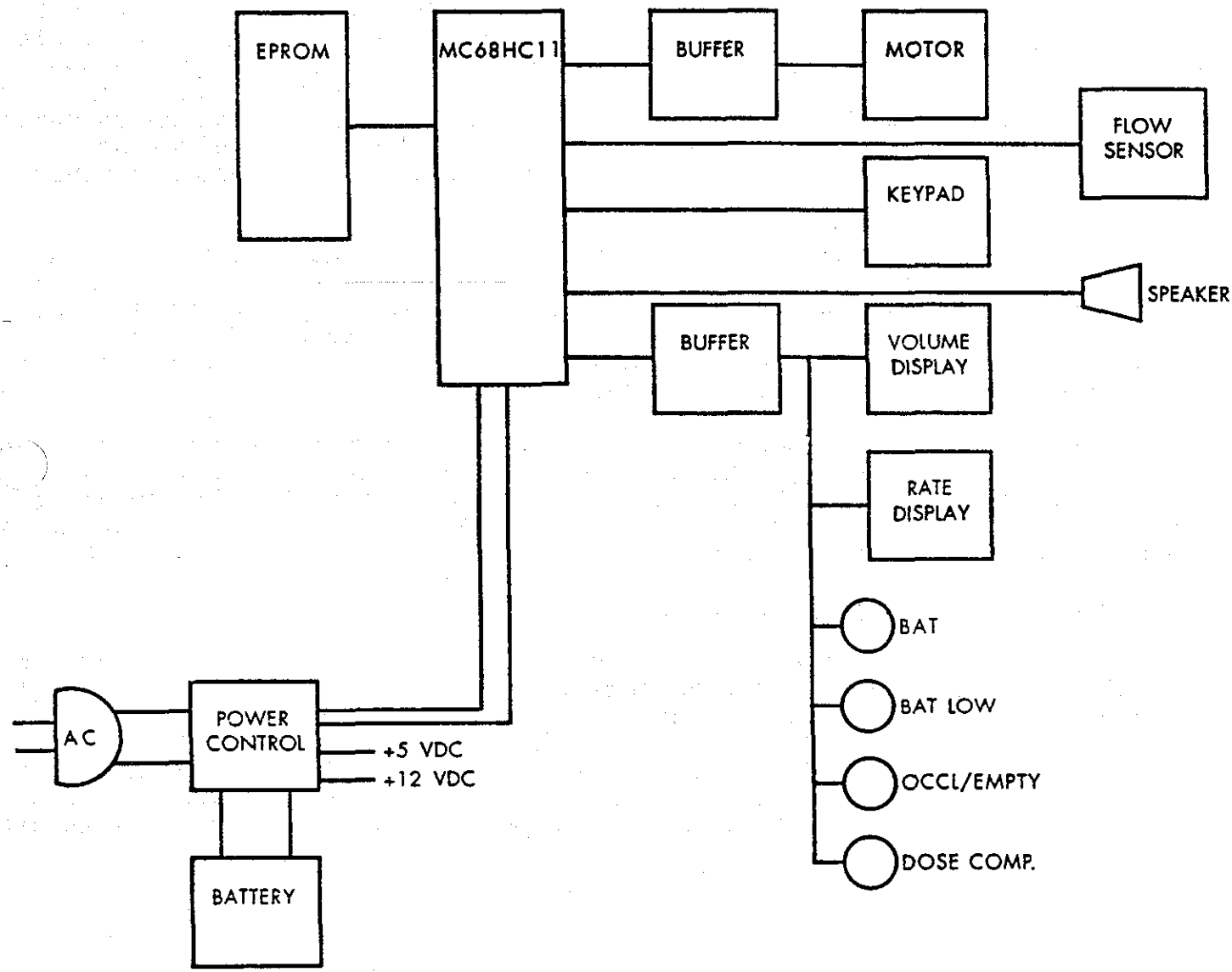

Figure 5-1
Circuit Block Diagram

Hardware (continued)

Flow of nutrient is detected by an LED light source and photo-detector. Immunity to ambient light interference is derived by modulating the source diode and detecting this signal on the phototransistor with tone decoder U2. R14 and C5 establish a 14 khz modulation frequency which is used to gate the source IR diode via D1, R9, and Q1. When no drop is present the source modulation is coupled to the detecting phototransistor. A 14 khz, parallel resonant circuit comprised of L1, C2, and R10 forms a bandpass around this frequency and allows the detected modulated signal to develop. This bandpass filter prevents noise due to ambient light from passing thru. The detected modulated signal is detected by the tone decoder, U2. When the signal is detected the output of U2, pin 8 goes to a logic low which turns off Q2, allowing the collector to go to 5 volts (logic high). If a drop blocks the path of the infrared light, it suppresses the modulation signal which causes U2 circuits to unlock driving pin 8 high which turns on Q2 and provide a latched logic low the microcomputer indicating a drop has occurred. The microcomputer unlatches the phase-lock circuit by driving FRESET\ low for a brief interval through D3.

When the motor is running, each drop of nutrient is detected and sensed by the microcomputer. If no drops are sensed (continuous stream also is detected as no drops) or if the number of drops per milliliter is higher or lower than expected, an alarm mode, discussed above, is entered. U4 is used as a variable voltage source to the beeper which is controlled by the alarm volume potentiometer.

System status is indicated by the LEDs. The processor via U8 and U14, sends the necessary strobe signals to turn the appropriate segment on the display panel. The BAT light indicates the system is operating on battery when illuminated. The BAT LOW light indicates the battery is discharged and should be charged. The OCCL/EMPTY light indicates the nutrient flow is not correct when illuminated. The DOSE/COMP light indicates that the preset dose has been delivered.

The battery is checked periodically to determine if the voltage is within operating range. The voltage is checked by an analog-to-digital converter internal to the processor. If the voltage is lower than a first threshold, the LOW BAT light is illuminated. IF the LOW BAT condition exists for 15 minutes, or if the voltage drops below a second threshold, the motor is then stopped and the alarm is sounded. If the voltage reaches a third threshold, the device automatically turns itself OFF.

CHAPTER 6
TROUBLESHOOTING

Troubleshooting

The Compat enteral formula feeding pumps are reliable electromechanical devices. The following tips will help you to correct problems that may arise. Read "Routine Maintenance Section" before opening pump case.

*** CAUTION - Remove AC line cord from receptacle before attempting to open the pump housing

Situation	Possible Cause	Solution
*OCCL/EMPTY alarm is activated	*Pump is on hold for more than 2 1/2 minutes	*Press RUN/HOLD key to return to hold mode.
	*Feeding container is empty.	*Replace or refill feeding container.
	*Occlusion is restricting flow.	*Identify point of occlusion. -Pump set: *Closed TUBING CLAMP *Kinked tubing. *Blocked tubing. -Feeding Tube -Feeding container
	*DRIP CHAMBER walls coated with formula.	*Replace pump set.
	*DRIP CHAMBER not properly placed in pump.	*Assemble properly.
	*Too much fluid in DRIP CHAMBER.	*Invert container and clear fluid from DRIP CHAMBER.
	*Drop sensor parts need cleaning.	*Clean with cotton swap dampened with warm soapy water.
	*Drip chamber in direct sunlight.	*Move pump into shade.
	*Battery run down. (LOW BAT is on.)	*Charge battery immediately
	*Poor harness connections.	*Check and repair J2 and both small connectors.

Troubleshooting (Continued)

Situation	Possible Cause	Solution
*OCCL/EMPTY alarm activated (Continued)	*Drop sensor parts not in place.	*Parts must be snapped into place on their respective sides, so that the lenses are visible.
*LOW BAT LED always on.	*Battery charge is below performance level.	*Batteries that have been left discharged may require 1-2 charge/ discharge cycles to operate at rated capacity. Batteries are normally good for at least 2 years, 200 full discharges or 300 partial discharges (whichever comes first) Replace the battery if necessary.
*BAT LED	*Line fuse blown.	*Replace 1/4a fuse with same type.
	*Poor wire harness connections.	*Check & repair J3
*Rate change alarm activated.	*INC, DEC, or TOTAL RESET pressed while pump in run mode.	*Press RUN/HOLD once to stop pump, before pressing other keys.
*AC operation only.	*Battery over-discharged	*Charge or replace battery.
	*F1 blown.	*Replace with mfg supplied fuse only.
	*Poor harness connections.	*Check & repair J3 and battery spade lugs.
*DOSE COMPLETE	*Pump has delivered preset volume.	*Press TOTAL RESET. Press RUN/HOLD key. Pump will operate until dose is completed again.
*No power. (no displays.)	*No AC	*Check AC outlet and fuse
	*Keypad not connected.	*Check J1 connection.
	*Poor harness connections.	*Check and repair J3, pins 2,3,7,8.

Troubleshooting Guide (Continued)

Situation	Possible Cause	Solution
*No audible alarm.	*Poor harness connections.	*Check and repair J3
*Motor hesitates or fails to turn.	*Bent shaft, ROTOR rubbing against case.	*Straighten shaft.
	*Poor harness connections.	*Check and repair J2
*Rate is low.	*Rollers sticking.	*Clean ROTOR and rollers.

APPENDIX A

Printed Circuit Board Schematics. A-1

Printed Circuit Board Layout A-3

Printed Circuit Board Parts List. A-4

Wiring Harnesses. A-7

Wiring Harness - Parts list A-10

Mechanical Assembly A-11

Mechanical Assembly Parts List. A-13

DATE	SYM	REVISION RECORD	DR	CK
4-19-91	A	RELEASED		
12-11-91	B	REVISED C2 AND B+		

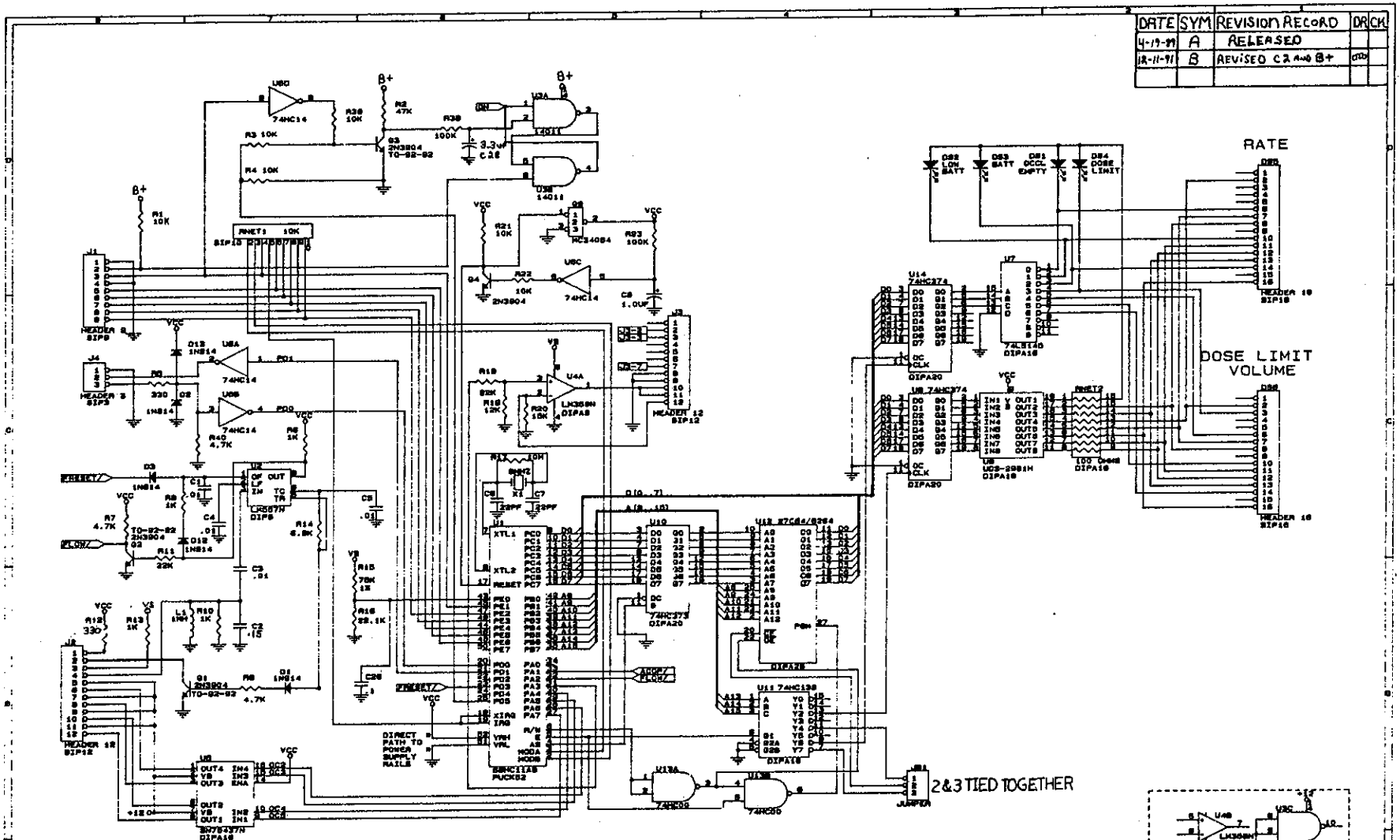

POWER PLANE

U1, 26	U14, 20
U2,4	U15
U3	U16
U4	RNET1,1
U5, 11	
U6, 14	
U7, 16	
U8, 20	
U9	
U10, 20	
U11, 16	
U12, 1,26&28	
U13, 14	

GROUND PLANE

U1, 1	U14,10
U2, 7	U15
U3,7	U16
U4	
U5,4,5,12&13	
U6,7	
U7,8	
U8,10	
U9,10	
U10,10	
U11,8	
U12,14	
U13,7	

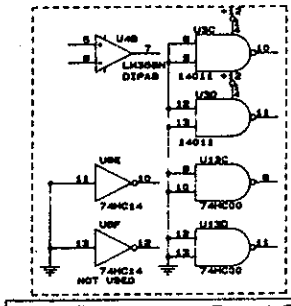

SANDOZ NUTRITION

SCHEMATIC, 199235/199240

Size C | Document Number SN 3500 | REV B

Date: December 12, 1991 | Sheet 1 of 2

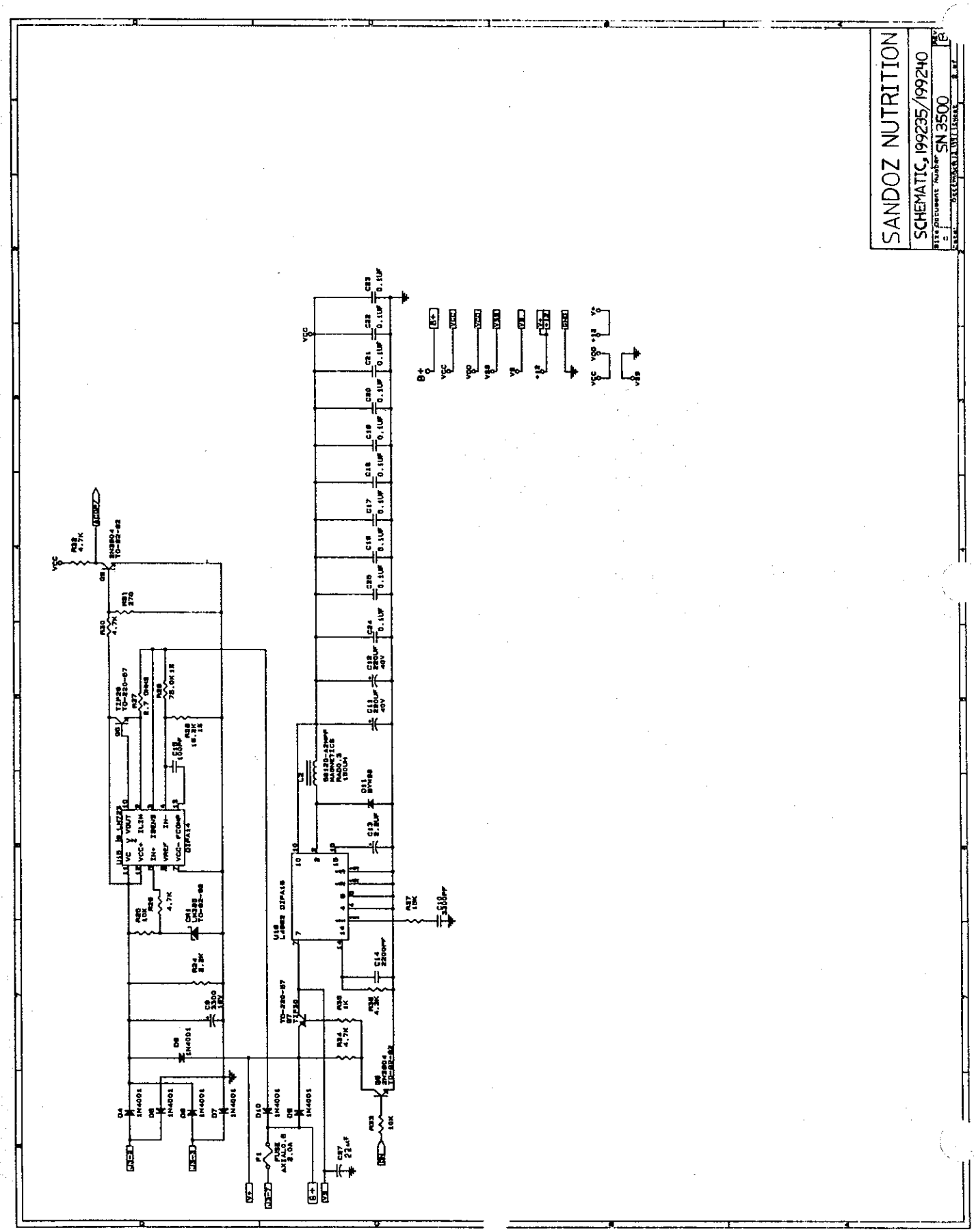
SANDOZ NUTRITION
SCHEMATIC, 199235/199240
SN 3500

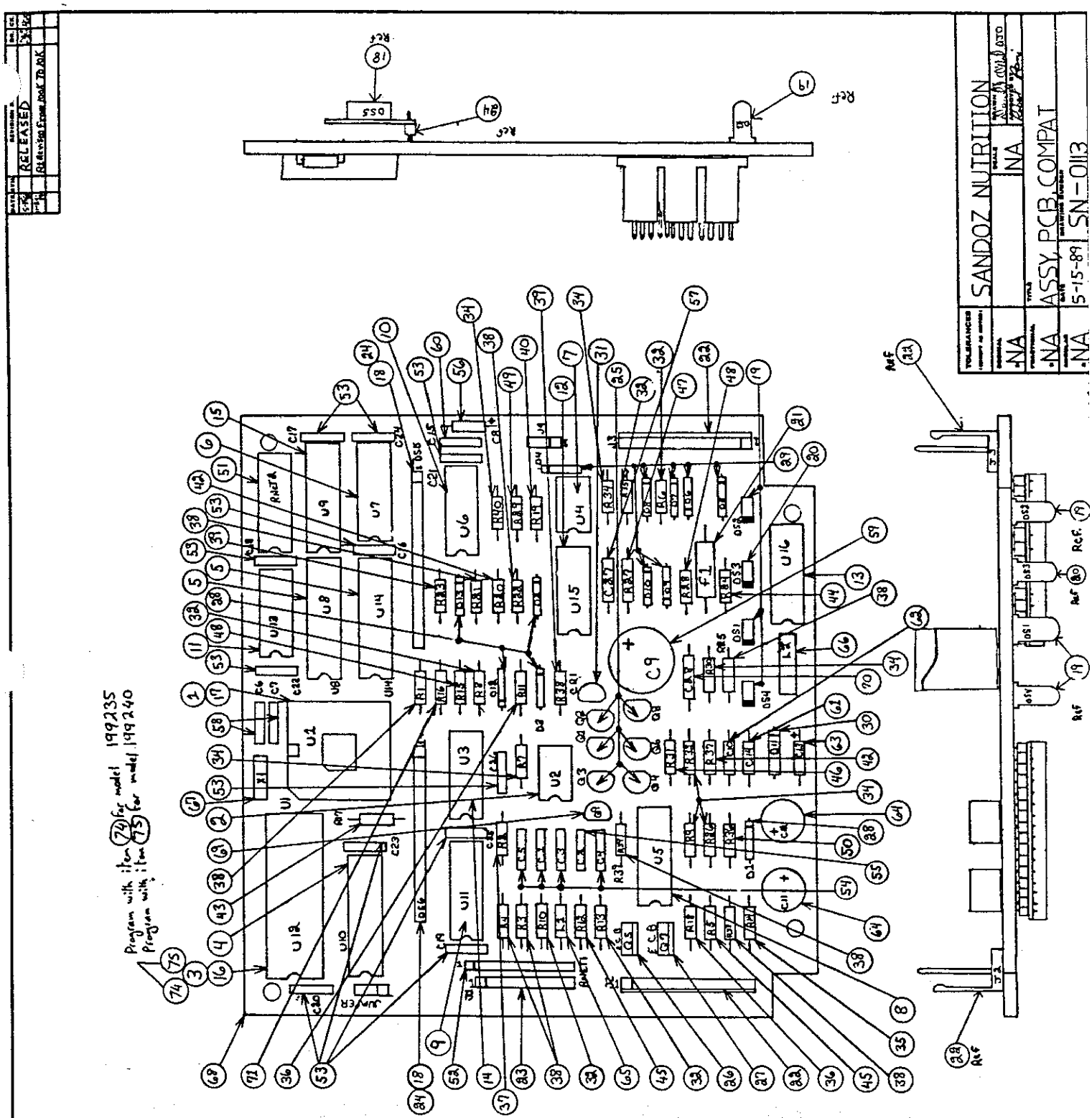
SANDOZ NUTRITION
ASSY, PCB, COMPAT
5-15-89
SN-0113
RELEASED
Program with item 74 for model 199235
Program with item 75 for model 199240

PRINTED CIRCUIT BOARD PARTS LIST

ITEM	PART NUMBER	REFERENCE DESIGNATION	DESCRIPTION
1	SN-200	U1	MICROCOMPUTER, 52 PIN
2	SN-201	U2	DETECTOR
3	SN-202	U12	8KX8,E-PROM,250 NS
4	SN-203	U10	OCTAL LATCH
5	SN-204	U8,U14	OCTAL LATCH
6	SN-205	U7	DISPLAY DRIVER
7	SN-206	U4	OP AMP
8	SN-207	U5	MOTOR DRIVER
9	SN-208	U11	DECODER
10	SN-209	U6	HEX INVERTER
11	SN-210	U13	QUAD, NAND GATE
12	SN-214	U15	VOLTAGE REGULATOR
13	SN-215	U16	DC/DC CONVERTER
14	SN-219	U3	NAND GATE
15	SN-221	U9	CURRENT DRIVER
16	SN-222	U12	SOCKET, 28 PIN
17	SN-223	U1	SOCKET, 52 PIN LCC
18	SN-211	DS5,DS6	DISPLAY LED
19	SN-212	DS1,DS2,DS4	DISPLAY, LED, YELLOW/AMBER
20	SN-213	DS3	DISPLAY, LED, GREEN
21	SN-220	F1	FUSE, 2A
22	SN-216	J3,J2	HEADER, 12 PIN
23	SN-217	J1	HEADER, 9 PIN

ITEM	PART NUMBER	REFERENCE DESIGNATION	DESCRIPTION
24	SN-218	DS5,DS6	SOCKET, 16 PIN
25	SN-224	Q1-Q4,Q6,Q8	TRANSISTOR 2N3904
26	SN-225	Q5	TRANSISTOR
27	SN-226	Q7	TRANSISTOR
28	SN-228	D1-D3,D12,D13	DIODE, 1N914B
29	SN-227	D4-D10	DIODE, 1N4001
30	SN-230	D11	DIODE, 3A SCHOTTKY
31	SN-229	CR1	VOLTAGE REFERENCE
32	SN-231	R8,R10,R13,R35,R6	RES, 1K,1/4W, 5%., CF
34	SN-233	R9,R7,R26,	
34	SN-233	R30,R32,R34,R40	RES, 4.7K, 1/4W, 5%., CF
35	SN-234	R14	RES, 6.8K, 1/4W, 5%., CF
36	SN-235	R11,R18	RES, 22K, 1/4W, 5%., CF
37	SN-236	R2	RES, 47K, 1/4W, 5%., CF
38	SN-237	R1,R3,R4,R21,	
38	SN-237	R22,R25,R33,R39	RES, 10K, 1/4W, 5%., CF
39	SN-238	R23,R38	RES, 100K, 1/4W, 5%., CF
40	SN-239	R19	RES, 12K, 1/4W, 5%., CF
42	SN-241	R20,R37	RES, 15K, 1/4W, 5%., CF
43	SN-242	R17	RES, 10 MEG, 1/4W, 5%.,CF
44	SN-243	R24	RES. 2.2K, 1/4W, 5%., CF
45	SN-296	R5,R12	RES, 1/4W, 5%., CF, 330 OHM
46	SN-244	R31	RES, 270 OHM, 1/4W,5%., CF
47	SN-245	R27	RES, 1/2W, 5%., CF, 2.7 OHM
48	SN-246	R15,R28	RES, 75K, 1%., 1/4W, MF

ITEM	PART NUMBER	REFERENCE DESIGNATION	DESCRIPTION
49	SN-247	R29	RES, 16.2K, 1%., 1/4w, MF
50	SN-248	R36	RES, 4.3K, 1/4W, 5%., CF
51	SN-249	RNET2	RESISTOR NETWORK 100 OHM
52	SN-294	RNET1	RESISTOR NETWORK 10K OHM
53	SN-250	C16-C26	CAPACITOR, .1UF
54	SN-251	C1,C3-C5	CAPACITOR, .01UF
55	SN-255	C2	CAPACITOR, .15UF
56	SN-253	C8	CAPACITOR, 1UF
57	SN-254	C27	CAPACITOR, 22UF
58	SN-297	C6,C7	CAPACITOR, 22PF
59	SN-256	C9	CAPACITOR, 3300UF
60	SN-257	C15	CAPACITOR, 100PF
61	SN-258	C14	CAPACITOR, 2200PF
62	SN-259	C10	CAPACITOR, 3300PF
63	SN-260	C13	CAPACITOR, 2.2UF
64	SN-261	C11,C12	CAPACITOR, 220 UF
65	SN-262	L1	INDUCTOR, 1.0MH
66	SN-263	L2	INDUCTOR, 150UH, 2A
67	SN-264	X1	CRYSTAL, 8 MHZ, HC-18
68	SN-293		P C BOARD BLANK
69	SN-301	Q9	VOLTAGE SENSOR
70	SN-300	C28	CAPACIATOR, 3.3 UF
71	SN-298	R16	RES, 1/4W, 1%., MF, 22.1K
74	SN-3400-35		SOFTWARE MODEL 199235
75	SN-3400-40		SOFTWARE MODEL 199240

PIN DESIGNATIONS FOR CONNECTOR P3

WIRE COLOR	P3
WHT	12
GRY	11
VIO	10
BLU	9
GRN	8
YEL	7
-	6
-	5
-	4
ORN	3
RED	2
-	1

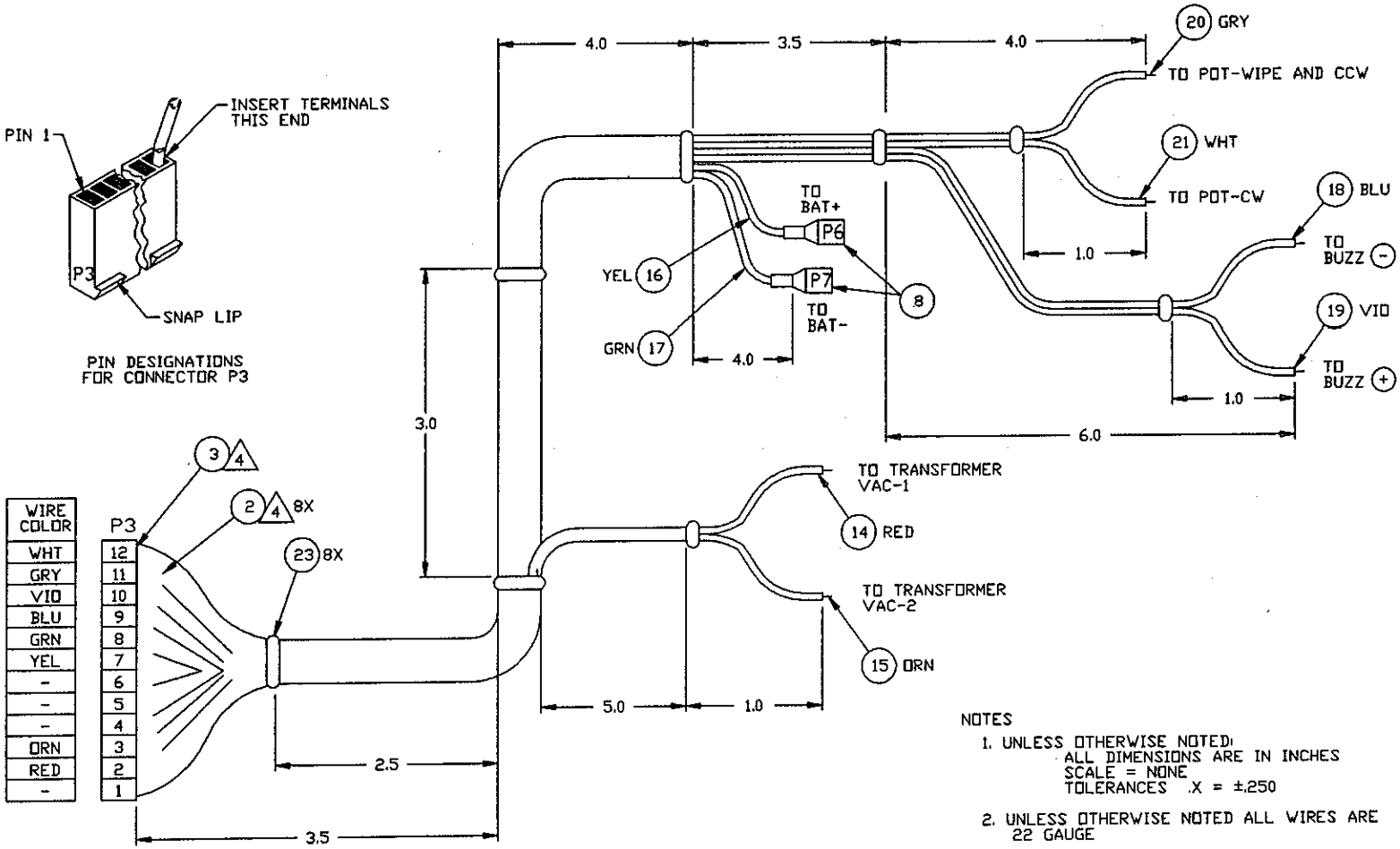

NOTES

1. UNLESS OTHERWISE NOTED:
   ALL DIMENSIONS ARE IN INCHES
   SCALE = NONE
   TOLERANCES .X = ±.250
2. UNLESS OTHERWISE NOTED ALL WIRES ARE 22 GAUGE
3. DIMENSIONS INDICATE WIRE RUN LENGTHS BETWEEN LOCATIONS SHOWN
4. CRIMP TERMINAL (2) ON EACH WIRE AND INSTALL IN SOCKET (3)
5. MATERIAL PER SN0141

SANDOZ NUTRITION

P.O. BOX 370
MINNEAPOLIS, MINNESOTA 55440
612-925-2100

APPROVALS	DATE	INITIAL
DRIG DWG BY	890213	M.FISHEL
SANDOZ APPROVAL		

SCALES SHOWN ABOVE

NO	REVISIONS	ECO	DATE	INITIAL
A	RELEASED	-	890589	B.RANK
B	ADDED NOTE 5	-	891120	B.RANK
-	-	-	-	-
-	-	-	-	-

DRAWING TITLE: HARNESS, WIRING, CIRCUIT BOARD, ENTERAL FEEDING PUMP
-

DRAWING NO: FILE NO 9275.002
SN0111

PLOT DATE 11/24/89

SHEET - OF -

The drawing and the design it depicts are the property of Sandoz Nutrition and are not to be used for any purpose not specifically authorized by the company. They are not to be reproduced, copied, released to third parties, or returned upon request from the owner.

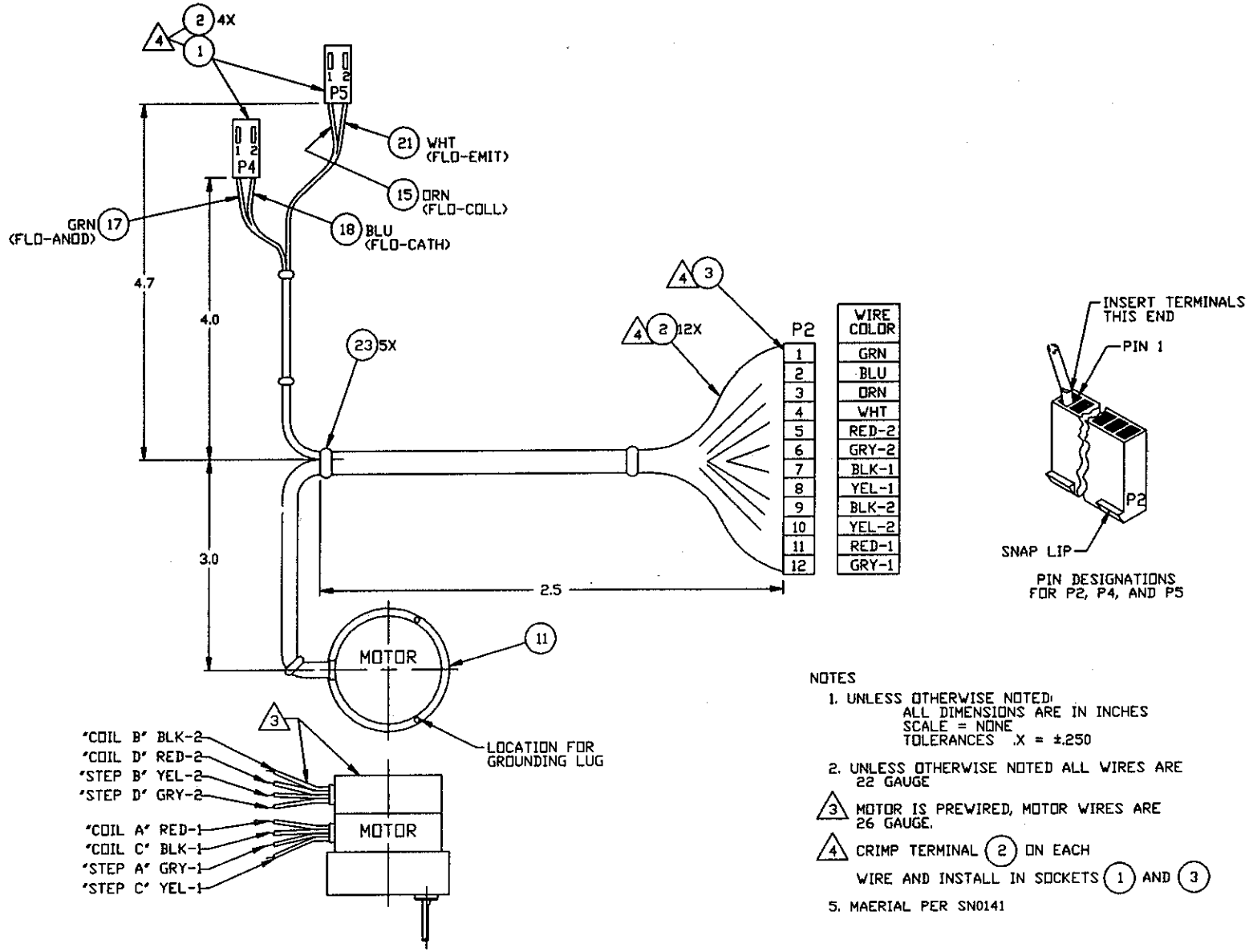

P2	WIRE COLOR
1	GRN
2	BLU
3	ORN
4	WHT
5	RED-2
6	GRY-2
7	BLK-1
8	YEL-1
9	BLK-2
10	YEL-2
11	RED-1
12	GRY-1

NOTES

1. UNLESS OTHERWISE NOTED:
   ALL DIMENSIONS ARE IN INCHES
   SCALE = NONE
   TOLERANCES .X = ±.250
2. UNLESS OTHERWISE NOTED ALL WIRES ARE 22 GAUGE
3. MOTOR IS PREWIRED, MOTOR WIRES ARE 26 GAUGE.
4. CRIMP TERMINAL (2) ON EACH WIRE AND INSTALL IN SOCKETS (1) AND (3)
5. MAERIAL PER SN0141

APPROVALS	DATE	INITIAL
DRWN BY	890213	RJFISHCL
SANDOZ APPROVAL		

NO	REVISIONS	ECO	DATE	INITIAL
A	RELEASED	-	890589	RJRANI
B	ADDED NOTE 5	-	891120	RJRANI
-	-	-	-	-
-	-	-	-	-

SCALE: SHOWN ABOVE

DRAWING TITLE: HARNESS, WIRING, MOTOR ENTERAL FEEDING PUMP

DRAWING NO: FILE NO 9275.002 SN0112

PLOT DATE: 12/24/89

SHEET: — OF —

SANDOZ NUTRITION
P.O. BOX 378
MINNEAPOLIS, MINNESOTA 55440
612-925-2186

The drawing and the design it carries are the property of Sandoz Nutrition. They are loaned only to the person to whom they are addressed and to persons authorized by them. They are not to be reproduced, copied, or used for any purpose other than that for which they are specifically loaned.

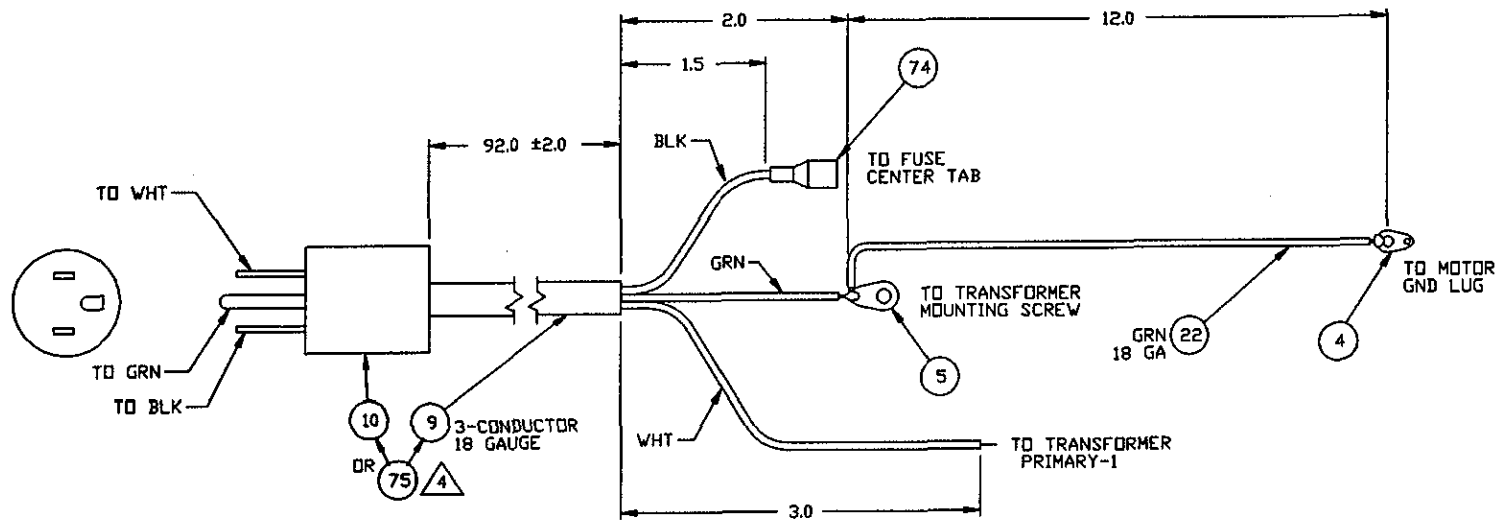

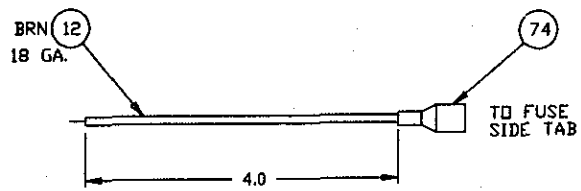

NOTES

1. UNLESS OTHERWISE NOTED:
   ALL DIMENSIONS ARE IN INCHES
   SCALE = NONE
   TOLERANCES .X = ±.250
2. DIMENSIONS INDICATE WIRE RUN LENGTHS BETWEEN LOCATIONS SHOWN
3. MATERIAL PER SN0141
4. USE 9 and 10 IF PURCHASED INDIVIDUALLY
   USE 75 IF PURCHASED AS AN ASSEMBLY

SANDOZ NUTRITION
P.O. BOX 370
MINNEAPOLIS, MINNESOTA 55440
612-925-2101

APPROVALS	DATE	INITIAL
DRIG DWG BY	890214	FISHEL
SANDOZ APPROVAL		

SCALES SHOWN ABOVE

NO.	REVISIONS	ECO	DATE	INITIAL
A	RELEASED	-	890589	BURANI
B	ITEM 74 WAS ITEM 8, ADDED NOTE 3	-	891120	BURANI
C	ADDED NOTE 4	-	920221	BURANI
-	-	-	-	-

DRAWING TITLE: HARNESS, WIRING, POWER CORD
ENTERAL FEEDING PUMP
—

DRAWING NO.: FILE NO 9275.002
SN0140

PLOT DATE 2/21/92

SHEET 1 OF 1

WIRE HARNESSES PARTS LIST

ITEM	DESCRIPTION	PART NO.	QUANTITY
1	SOCKET, 2 PIN	SN-272	2
2	CRIMP TERMINAL	SN-273	24
3	SOCKET, 12 PIN	SN-274	2
4	GROUNDING LUG, #2	SN-275	1
5	GROUNDING LUG, #8	SN-276	1
8	CONN, AMP: 02-520193-2	SN-270	2
9	POWER CORD 18/3-SJT M/E	SN-279	7.67 ft.
10	POWER PLUG	SN-280	1
11	STEPPER MOTOR, UNI-POLAR	SN-267	1
12	WIRE, BRN, 18GA	SN-333	.33 ft.
14	WIRE, RED, 22GA	SN-284	.80 ft.
15	WIRE, ORANGE, 22GA	SN-285	1.52 ft.
16	WIRE, YELLOW, 22GA	SN-286	1.21 ft.
17	WIRE, GREEN, 22GA	SN-287	1.88 ft.
18	WIRE, BLUE, 22GA	SN-288	2.34 ft.
19	WIRE, VIOLET, 22GA	SN-289	1.67 ft.
20	WIRE, GRAY, 22GA	SN-290	1.50 ft.
21	WIRE, WHITE, 22GA	SN-292	1.56 ft.
22	WIRE, GREEN, 18GA	SN-291	1.00 ft.
23	CABLE TIE WRAP	SN-330	13
74	CONN, AMP: 02-520181-2	SN-360	2
75	POWER PLUG WITH CORD	SN-305	1

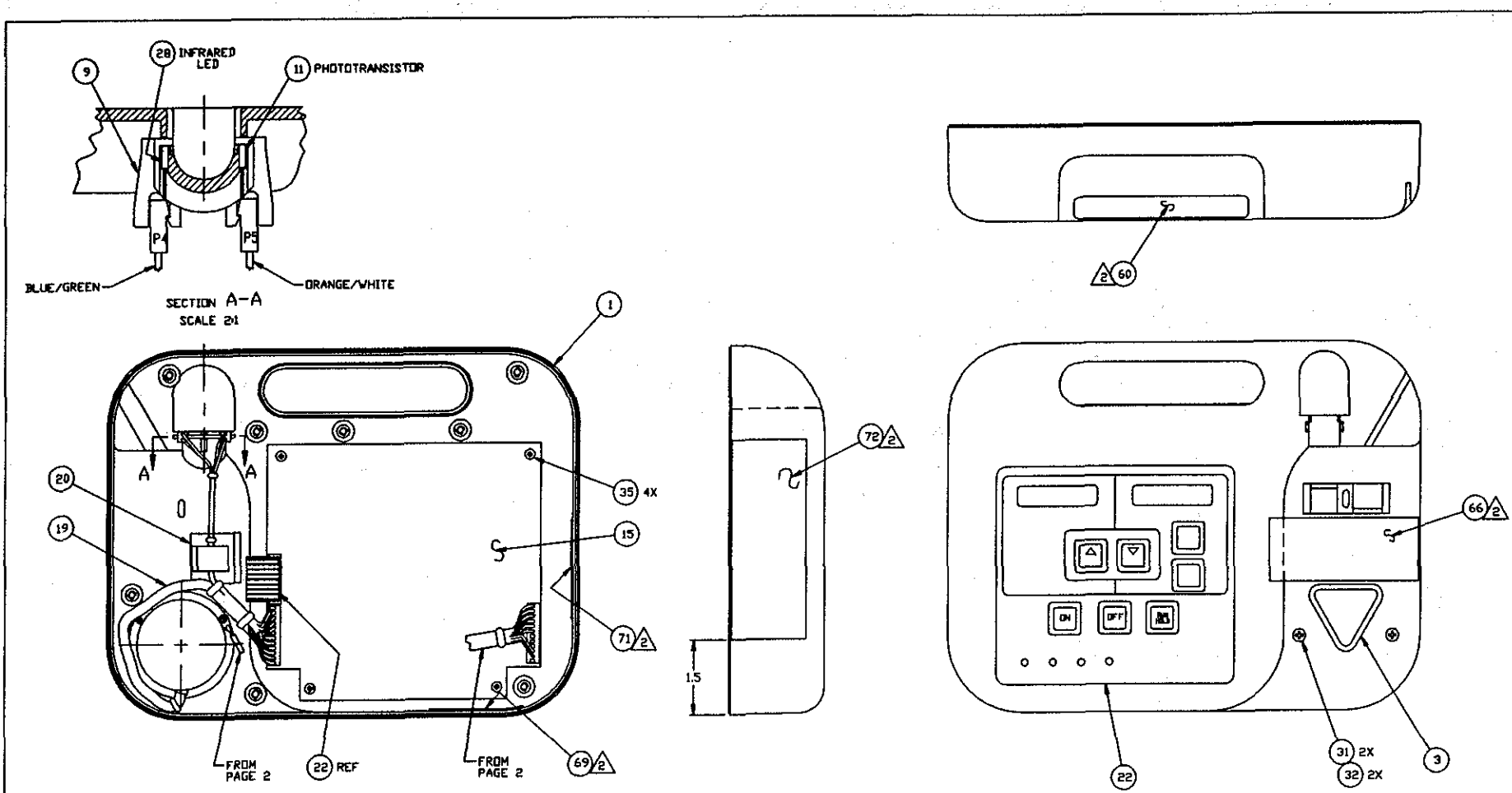

NOTES

1. UNLESS OTHERWISE NOTED:
   ALL DIMENSIONS ARE IN INCHES
   SCALE 1/1
   TOLERANCES .X = ±.03

2. LOCATE APPROX AS SHOWN

3. USE LABEL 64 ON MODEL 199235 AND LABEL 65 ON MODEL 199240.

4. APPLY HEAT SHRINK TUBING

CAD DWG

SCALES SHOWN ABOVE	APPROVALS	DATE	INITIAL	NO.	REVISIONS	ECO	DATE	INITIAL
	ORIG DWG BY	890216	FISHEL	A	RELEASED	-	890509	B.RANI
				B	REVISED, MOVED LABELS	-	890827	B.RANI
				C	REVISED, ADDED BATTERY LABELS	-	920221	B.RANI
				-	-	-	-	-
	SANDOZ APPROVAL							

DRAWING TITLE: ASSY, FINAL, COMPAT

PROJECT NO. —

DRAWING NO. FILE NO 9275.001 SN0101

PLOT DATE 2/21/92

SHEET 1 OF 2

SANDOZ NUTRITION

P.O. BOX 370
MINNEAPOLIS, MINNESOTA 55440
612-925-2100

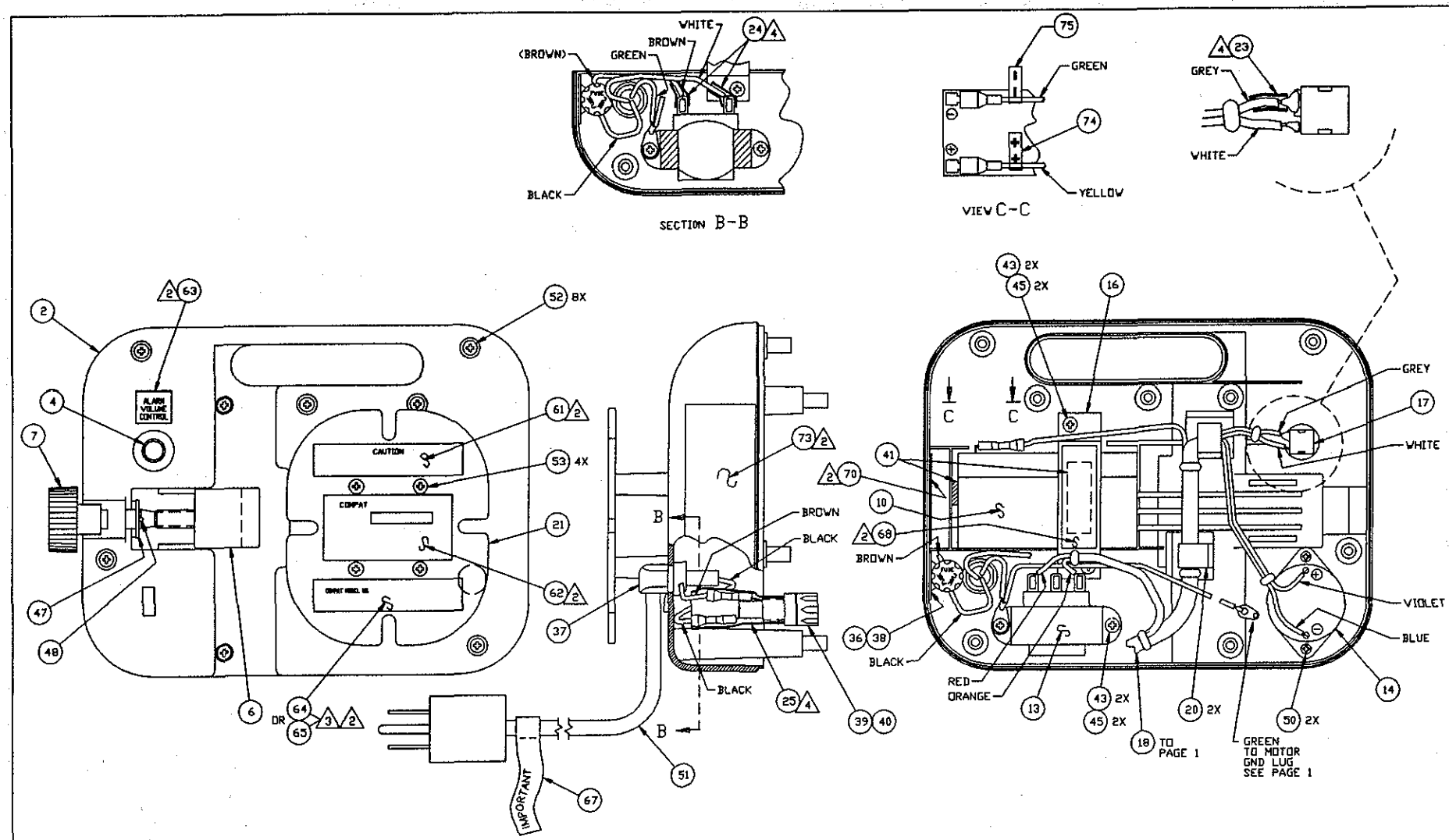

SANDOZ NUTRITION
P.O. BOX 370
MINNEAPOLIS, MINNESOTA 55440
612-925-2100

APPROVALS	DATE	INITIAL
DRIG DWG BY	890216	FISHEL
SANDOZ APPROVAL		

SCALES SHOWN ABOVE

NO.	REVISIONS	ECO	DATE	INITIAL
A	RELEASED	-	890509	BRANI
B	REVISED, MOVED LABELS	-	890827	BRANI
C	REVISED, ADDED BATTERY LABELS	-	920221	BRANI
-	-	-	-	-

DRAWING TITLE: ASSY, FINAL, COMPAT

PROJECT NO. —

DRAWING NO. FILE NO 9275.001 SN0101

PLOT DATE 2/21/92

SHEET 2 OF 2

MECHANICAL ASSEMBLY PARTS LIST

ITEM	DESCRIPTION	PART NO.	QUANTITY
1	ENCLOSURE, FRONT HALF	SN-102	1
2	ENCLOSURE, BACK HALF	SN-103	1
3	PUMP SPOOL ASSEMBLY	SN-105	1
4	KNOB	SN-103-7	1
6	BLOCK, CLAMP ASSEMBLY	SN-107	1
7	CLAMP ASSEMBLY	SN-108	1
9	SENSOR CLIP	SN-104	1
10	BATTERY, 12V, 1.2AH	SN-265	1
11	PHOTO TRANSISTOR	SN-266	1
13	TRANSFORMER 12.6V	SN-268	1
14	PIEZO SPEAKER	SN-269	1
15	PC BOARD ASSY.	SN-113	1
16	BRACKET, BATTERY	SN-110	1
17	POTENTIOMETER, 100K OHM	SN-271	1
18	HARNESS FOR CIRCUIT BD.	SN-111	1
19	HARNESS FOR STEPPER MOTOR	SN-112	1
20	WIRE HARNESS CLIPS	SN-103-9	3
21	POWER CORD PLATE	SN-106	1
22	KEYPAD, MEMBRANE	SN-114	1
23	SHRINK TUBING, 1/8"	SN-282	0.10 ft.
24	SHRINK TUBING, 3/16"	SN-283	0.33 ft.
25	SHRINK TUBING, 1/2"	SN-283-1	0.20 ft.
28	INFRARED, L.E.D.	SN-334	1

ITEM	DESCRIPTION	PART NO.	QUANTITY
31	SCREW 6-32X1/2,STAINLESS	SN-102-1	2
32	LOCK WASHER #6, STAINLESS	SN-102-3	2
35	SCREW, #4X5/16, TYPE B	SN-102-5	4
36	CABLE TIE WRAP	SN-330	1
37	STRAIN RELIEF	SN-281	1
38	ADHESIVE BACK PAD	SN-331	1
39	FUSE HOLDER	SN-277	1
40	FUSE, 1/4 AMP, 250 V	SN-278	1
41	FOAM STRIPS	SN-332	2
43	SCREW, 8-32 X 1/4"	SN-103-1	4
45	WASHER, LOCK, #8 SPLIT	SN-103-4	4
47	THRUST WASHER, .415 X.812	SN-109-3	1
48	ROLL PIN, .1"x.75"	SN-109-5	1
50	SCREW, ALARM, TYPE B	SN-103-5	2
51	HARNESS FOR POWER CORD	SN-140	1
52	SCREW, 8-32 X 7/8"	SN-102-7	8
53	SCREW, 8-32 X 3/8"	SN-103-11	4
60	LABEL, DANGER	SN-1000	1
61	LABEL, CAUTION	SN-1001	1
62	LABEL SERIAL NO.	SN-1002	1
63	LABEL, VOLUME, ALARM	SN-1003	1
64	LABEL, MODEL NO.	SN-1004	1
65	LABEL, MODEL NO., NO ALARM	SN-1005	1
66	LABEL, NOTICE	SN-1006	1

ITEM	DESCRIPTION	PART NO.	QUANTITY
67	LABEL, IMPORTANT	SN-1007	1
68	LABEL, WARNING, BATTERY	SN-1008	1
69	LABEL, FUSE, 2A	SN-1009	1
70	LABEL, FUSE 1/4A	SN-1010	1
71	LABEL, WARNING, FUSE	SN-1011	1
72	LABEL, DIREC., R, VIEW DOSE	SN-1013	1
73	LABEL, DIRECTION, L.PRESS	SN-1012	1
74	PLUS POLARITY INDICATOR	SN-1018	1
75	MINUS POLARITY INDICATOR	SN-1019	1

SANDOZ NUTRITION CORPORATION offers a full line of enteral delivery system products.

PRODUCT DESCRIPTION		CATALOG NO.
PUMPS		
Compat	Enteral Feeding Pump with Dose Limit and Memory.	199235
Compat	Enteral Feeding Pump with Dose Limit and Memory, No Hold Alarm.	199240
ADMINISTRATION SETS AND CONTAINERS		
Compat	Gravity Set with Piercing Spike.	199206
Compat	Pump Set with Piercing Spike	199207
Compat	500ml Top Fill Enteral Feeding Container with pre-attached Enteral Delivery GRAVITY SET.	199210
Compat	1000ml Top Fill Enteral Feeding Container with pre-attached Enteral Delivery GRAVITY SET.	199211
Compat	500ml Top Fill Enteral Feeding Container with pre-attached Enteral Delivery PUMP SET	199212
Compat	1000ml Top Fill Enteral Feeding Container with pre-attached Enteral Delivery PUMP SET	199213
Compat	Pump Set with 40mm Screw Cap	1992
I.V. POLE		
Compat	Portable I.V. Pole	199224

Should you have any questions about the compatibility or usage of COMPAT products or any other SANDOZ NUTRITION CORPORATION product call 1-800-333-3785 from anywhere in the United States or Canada or simply write to:

Sandoz Nutrition
P.O. Box 370
Minneapolis, MN 55440

Compat Pump Service Manual
199235/199240

This service manual is to be used with the following Compat Enteral Feeding Pumps having software revision 1.XX or 2.XX.

199235 - Compat Enteral Feeding Pump with Dose Limit and Memory. (software revision 1.XX or 2.XX)

199240 - Compat Enteral Feeding Pump with Dose Limit and Memory, No Hold Alarm. (software revision 1.XX or 2.XX)

These Pumps can be identified as follows:

- o Serial Number is less than 399999, AND
- o No "UPGRADE" label is present next to the serial number on the back of the pump.

For further identification, the software revision can be determined by following the procedure described in paragraph number 3 (Software Revision Test Mode) on page 5-3 of this Service Manual.

Note: For pumps having an "UPGRADE" label or a serial number of 400000 or above, refer to the first half of this manual. (white pages)

TABLE OF CONTENTS

CHAPTER 1
INTRODUCTION. 1-1

Compat Enteral Feeding Pump. 1-1
Description. 1-1
Operation. 1-1
Specifications 1-3

CHAPTER 2
OPERATING INSTRUCTIONS. 2-1

Controls & Indicators. 2-1
How to Operate Unit. 2-2
Alarms 2-4

CHAPTER 3
ROUTINE MAINTENANCE 3-1

Cleaning 3-1
Disinfecting 3-2
Functional Test Mode 3-2
Display Test Mode. 3-3
Motor Speed Test 3-3
Occlusion Alarm Test 3-3
Memory Test. 3-3

CHAPTER 4
QUANTITATIVE SYSTEM TEST. 4-1

Flow Rate Accuracy Test. 4-1
Electronics Test 4-1
Enter Test Mode 4-2
Check Numerical Displays. 4-2
Check Drop Sensor 4-2
Check Keypad Keys 4-2
Check Audible Alarm 4-2
Check AC/Battery Sensing. 4-2
Check Low Battery Sensing 4-2
Electrical Measurements 4-3

CHAPTER 5
THEORY OF OPERATION 5-1

General. 5-1
Software 5-1
Hardware 5-4

CHAPTER 6
TROUBLESHOOTING 6-1

TABLE OF CONTENTS (CONTINUED)

APPENDIX A

Printed Circuit Board Schematics. A-1

Printed Circuit Board Layout A-3

Printed Circuit Board Parts List. A-4

Wiring Harnesses. A-7

Wiring Harness - Parts list A-10

Mechanical Assembly A-11

Mechanical Assembly Parts List. A-13

LIST OF ILLUSTRATIONS

Figure No.	Title	Page
2-1	Front Panel	2-1
2-2	Activate Pump	2-2
2-3	Installation of Drip Chamber	2-2
2-4	Silicone Tubing Placement	2-3
2-5	Pump Adaptor/PVC Tubing Placement	2-3
5-1	Logical Block Diagram	5-5

CHAPTER 1
INTRODUCTION

This service manual is to be used with the following Compat Enteral Feeding Pumps:

199235 - Compat Enteral Feeding Pump with Dose Limit and Memory. (software rev. 1.XX or 2.XX)
199240 - Compat Enteral Feeding Pump with Dose Limit and Memory, No Hold Alarm. (software rev. 1.XX or 2.XX)

Description

The pump is of a peristaltic, volumetric, and rotary design. It regulates the flow rate of enteral feeding formulas. The pump is an easy to use and versatile device for the administration of all enteral formula solutions. The salient features of the pump are as follows:

* Ease of use
* Adjustable feeding rates from 1 to 295 ml/hr (1 ml/hr increments)
* Settable Dose Limit for intermediate feeding from 5 ml to 9995 ml (5 ml increments)
* Separate Rate and Total formula Volume/Dose Limit displays
* Memory retention of Infusion Rate, Dose Limit and Volume Delivered.
* Light weight and portability
* Easily understood alarm signals
* Low occlusion pressure
* Self-test modes
* Built in pole clamp
* AC and Battery operation
* Ease of cleaning

Operation

The pump uses a stepping motor to pump enteral feeding formulas. The user establishes a feeding rate by pressing the INCREMENT (INC) and DECREMENT (DEC) keys on the control panel, changing the INFUSION RATE display. A microprocessor then calculates the required motor speed(number of motor steps for each periodic cycle). When the operator presses the RUN/HOLD key, the unit begins to pump fluid through a tubing set, producing drops in the drip chamber. (On model 199235, leaving the pump in the rate setting (or "hold") mode for more than 2-1/2 minutes will cause an alarm. The alarm is a blinking LED and a buzzer sound.)

As the pump runs, it continuously updates the VOLUME DELIVERED display and monitors the rate at which the drops fall through the drip chamber. If this rate is insufficient, the pump signals an OCCL/EMPTY condition by lighting an LED and sounding the alarm. The operator m stop or start the feeding at any time by pressing the RUN/HOLD Key. may then clear the VOLUME display by pressing TOTAL RESET. If the DOSE LIMIT mode is selected, the microprocessor monitors the VOLUME DELIVERED against the DOSE LIMIT set point. When VOLUME DELIVERED is equal to DOSE LIMIT set, the pump rotor will stop, the alarm will sound twice, and the DOSE LIMIT LED will continuously flash.

The pump has a built in memory for retaining pump settings. If the unit is turned off at any time, the Infusion Rate, Dose Limit and Volume Delivered are automatically stored. Once the pump is turned ON, the previously stored settings are automatically recalled.

The pump uses a rechargeable lead-acid battery to allow portable operation. The battery charge level is monitored by the microprocessor, which lights the LOW BAT LED approximately fifteen minutes before the pump alarms and stops.

A summary of the alarm conditions are as follows:

Battery Operation (normal)...Only the green LED is lit.
Low Battery Condition.....LED lights for 15 minutes, then flashes while unit beeps.
Occlusion.....LED flashes and unit beeps.
Dose Complete.....LED flashes and unit beeps twice.

Specifications

Type of Device.....Volumetric enteral formula feeding pump.

Mechanism.....Rotary peristaltic.

Operating Rates.....Infusion - 1-295 ml/hr in 1 ml/hr increments. Dose Limit 0-9995 ml in 5 ml increments (0 Dose Limit implies no dose limit monitoring by pump).

Memory.....Memory Retention of infusion rate, dose limit and volume delivered even if unit is turned off.

Accuracy.....+/-10% of selected flow rate.

Occlusion Pressure.....15 psi, maximum.

Battery.....-Sealed lead-acid.
-Rechargeable, no memory.
-Operating time 8 hours at 100 ml/hr (nominal).
-Automatically recharges when unit is plugged in. Recharge time from complete discharge to full charge is 12 hours.
-Self discharge: charge unit fully every six months.

Dimensions.....7.4"H x 9.5"W x 5.3"D.

Weight.....5.7 lbs.

Case Material.....Fire resistant plastic.

Power Requirement.....115 VAC, 187mA, 60Hz.

Fuses.....Line: 1/4a, 250v, 3AG type.
Battery: 2a board mount.

CHAPTER 2
OPERATING INSTRUCTIONS

Controls & Indicators

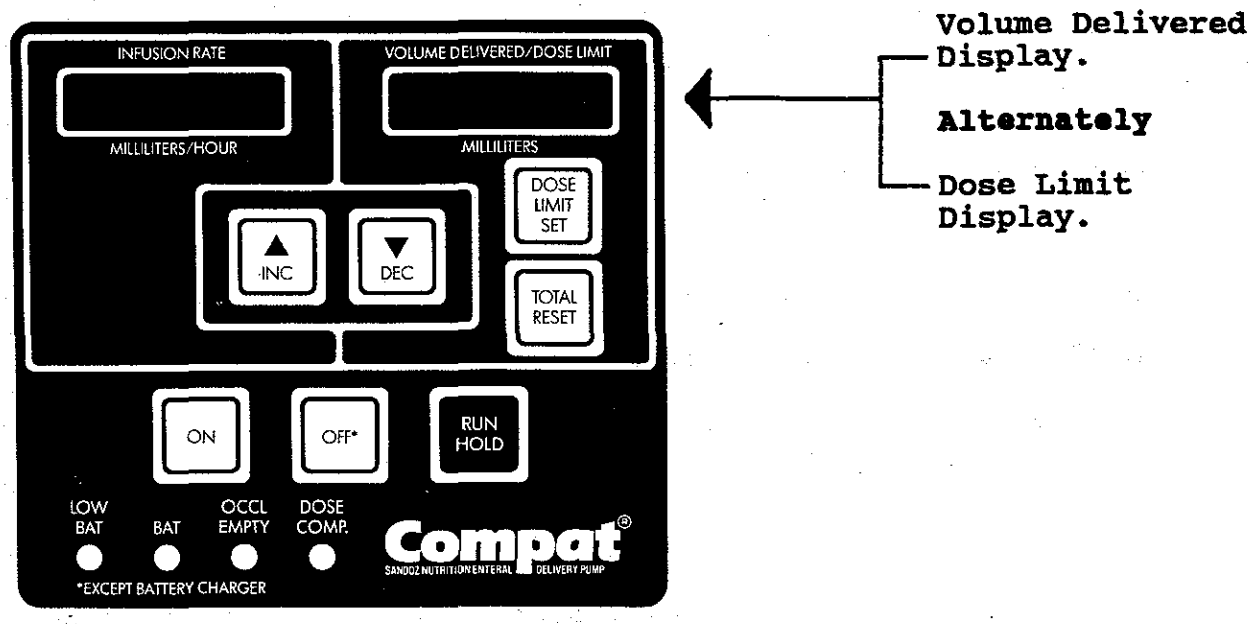

Figure 2-1 Front Panel

1. **On,** Applies Power to unit.

2. **Off,** Turns power off except to battery charger.

3. **Inc,** Increases flow rate when pressed and held. Increases dose after Dose Limit Set Key has been pressed.

4. **Dec,** Decreases flow rate when pressed and held. Decreases dose after Dose Limit Set Key has been pressed.

5. **Run/Hold,** Alternately starts and stops unit. Corrects alarm condition and restarts unit when pressed twice.

6. **Total Reset,** Resets volume delivered display to 0.

7. **Infusion Rate Display,** Indicates delivery rate.

8. **Dose Limit Set,** Displays dose limit and allows dose to be set.

9. **Volume Delivered Display,** Constantly indicates total volume delivered.

   Dose Limit Display, Indicates Dose Limit volume set when Dose Limit Set Key is pressed during operation.

How To Operate Unit

1. Plug the power cord into a 115VAC., 60 Hz. three wire grounded outlet.

2. Press ON - alarm will sound briefly. Remember, the pump has memory and will automatically recall the previous parameter settings. (Figure 2-2)

3. Check Infusion Rate. If change is desired, press INC or DEC to change rate setting. (Figure 2-2)

4. Check Dose Limit by pressing DOSE LIMIT SET. If change is desired, press INC or DEC within the next 3 seconds to change setting limit. Zero Dose Limit implies no dose limit monitoring by pump. (Diagram 2)

5. Press TOTAL RESET to clear Total Volume, if desired.

6. Insert drip chamber into drip chamber brackets. (Figure 2-3)

7. Open roller clamp. Expel air from tubing. Close clamp.

8. Stretch silicone tubing around rotor. (Figure 2-4)
   Insert pump adaptor into bridge. (Figure 2-5)

9. Place tubing into tubing guide. (Figure 2-5)

10. Attach pump set to patient's feeding tube.

11. Open roller clamp.

12. Press RUN/HOLD to start pump.

13. "OFF" will turn off the pump at any time. (Infusion Rate, Total Dose Set and Volume Delivered are retained.)

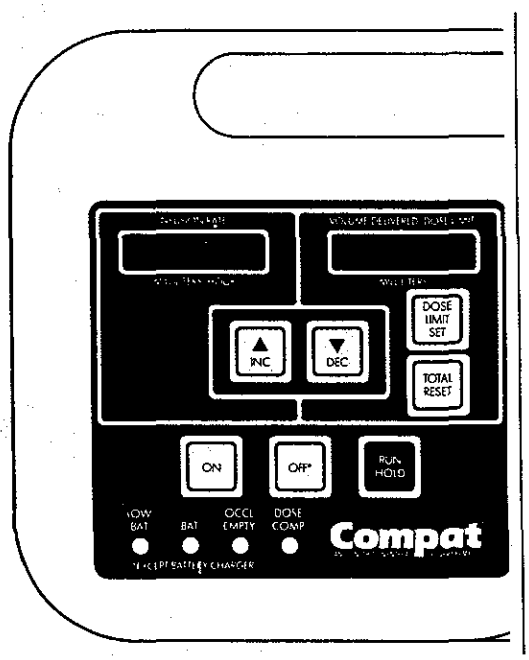

Figure 2-2 Activate Pump; Set Flow Rate.

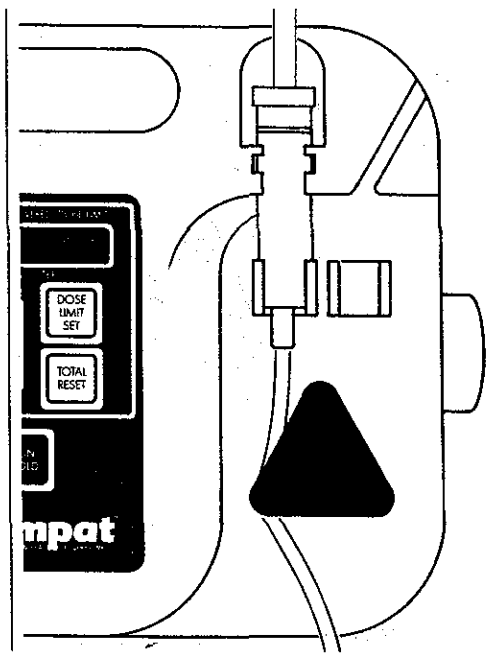

Figure 2-3 Insert Pump Set Drip Chamber.

HOW TO MODIFY PUMP SETTINGS
TO CHANGE RATE OR DOSE LIMIT.

1. Press RUN/HOLD to stop pump.

2. Select new Infusion Rate by pressing INC or DEC.

3. Select new Dose Limit by pressing DOSE LIMIT SET and then press INC or DEC within next 3 seconds.

4. Press TOTAL RESET to clear Volume Delivered, if desired.

5. Press RUN/HOLD to restart pump.

TO VIEW DOSE LIMIT, Press DOSE LIMIT SET. Dose Limit will be displayed for a few seconds.

VOLUME DELIVERED: Total Volume delivered is cleared when TOTAL RESET is pushed.

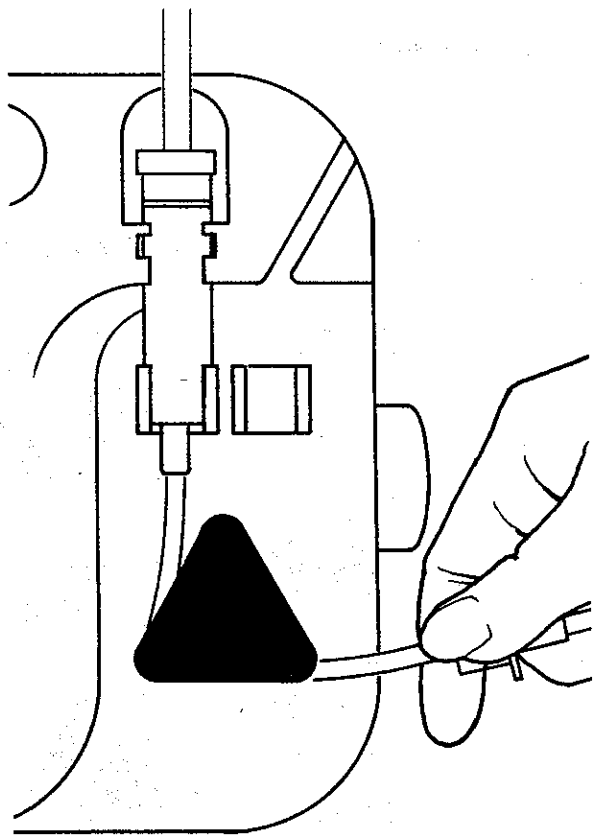

Figure 2-4 Assemble Silicone Tubing Around Rotor.

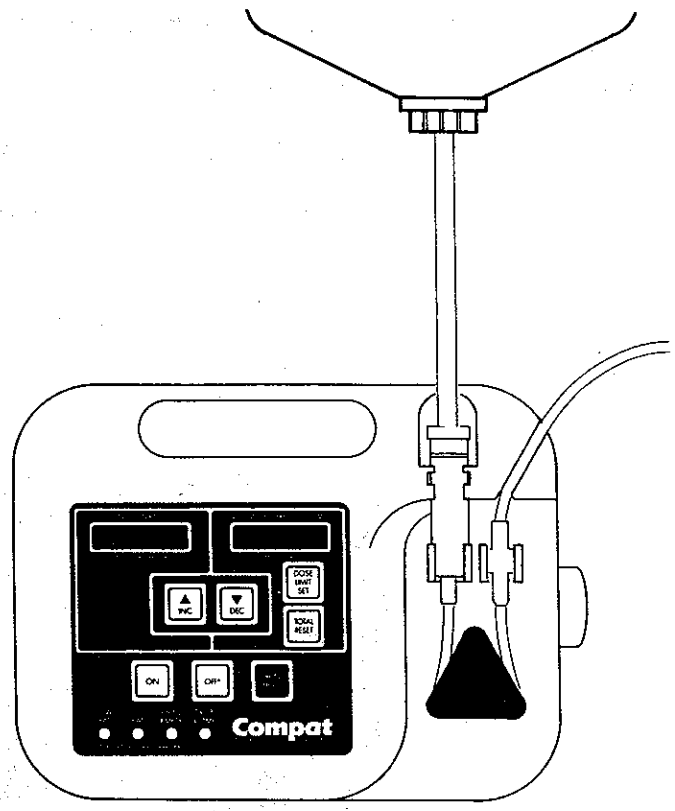

Figure 2-5 Pump Adaptor Placement. PVC Tubing Placement.

Alarms

BATtery Light:

Leave the pump plugged into an AC outlet whenever possible. When operated on battery power, it will light the BAT light. This is normal and no alarm will sound.

LOW BATtery Light:

This LED will come on when the pump has approximately 15 minutes of battery life left. After 15 minutes, this LED will flash and the audible alarm will sound. The pump will stop. If battery operation mode continues beyond this point, the unit will turn off.

Whenever the LOW BAT light is on, plug the pump into an AC outlet. Feeding will continue normally, and the battery will begin to charge.

To avoid degrading battery life, it is important not to run down the battery.

OCCL/EMPTY Light:

The OCCL/EMPTY alarm is activated under the following conditions:

1. Formula container is empty.
2. An occlusion has caused delivery to stop.
3. The pump is left on hold for more than 2-1/2 minutes (model 199235 only).
4. DRIP CHAMBER is over filled.
5. DRIP CHAMBER walls are coated with solution.
6. Drop sensor lenses in drip chamber guide need cleaning.
7. DRIP CHAMBER is improperly placed.
8. Intense light is falling on the Drop sensor.

Correct the cause of alarm, then press the RUN/HOLD key. This cancels the alarm and returns pump to the hold mode.

DOSE/COMPlete Light:

This light will come on when the pump has delivered the preset volume or while in the DOSE LIMIT SET mode.

RATE CHANGE:

The alarm will sound if the user presses INC, DEC, or TOTAL RESET while the unit is running. No LED will light.

Cleaning

Cleaning consists of removing any spillage from the pump housing, rotor, rollers, control panel, and drop sensor.

WARNING:

DISCONNECT THE PUMP FROM THE AC POWER SOURCE BEFORE CLEANING TO PREVENT ELECTRICAL SHOCK.

PROLONGED EXPOSURE TO ALCOHOL, HOUSEHOLD DETERGENTS OR STRONG CLEANSERS COULD RESULT IN DAMAGE TO THE PUMP HOUSING.

DO NOT IMMERSE PUMP IN CLEANING SOLUTION.

DO NOT AUTOCLAVE AND DO NOT USE STERILIZING SOLUTIONS.

1. Using a cloth or sponge, clean the pump housing and rollers with warm soapy water. Clean the drop sensor parts with soft cotton swabs and isopropyl alcohol.
2. Check that the pump rotor rollers rotate freely. If they do not rotate easily, clean them as described in steps 3-8.
3. Loosen the set screw with a 3/32" (0.094") Allen wrench and pull the pump rotor from its shaft.
4. Clean the rollers thoroughly with warm soapy water or isopropyl alcohol if necessary.
5. After cleaning, align pump rotor with the flat on the output shaft.
6. Push the rotor all the way on the shaft, so that it is approximately 0.050" (1/8 cm) from the surface of the case.
7. Tighten the set screw.
8. Use thread setting adhesive to prevent set screw from vibrating free.

Disinfecting

If it is necessary to disinfect the entire pump, the following is recommended:

GENERAL DISINFECTANTS:	Cidex (Arbrook, Inc.) Hibiclens (Stuart Pharmaceuticals) pHishex (Winthrop-Breon Labs) Isopropyl Alcohol

AIDS and Hepatitis

Disinfectants:	10% concentration of 5.25% sodium hypochlorite (Household bleach)

Tuberculosis

Disinfectants:	70% concentration of isopropyl alcohol.

After application of these disinfecting agents, allow to air dry. It should be noted that these recommendations should not be substituted for official procedures that may differ among institutions. To determine the proper procedure in a particular institution, contact the Infection Control Department.

DO NOT AUTOCLAVE **DO NOT IMMERSE PUMP IN CLEANING SOLUTIONS**

Functional Test Mode

This test checks operation of the motor, microcomputer, display, control panel, and drop sensor.

Perform the test as follows:

1. Press the ON key.
2. To enter test mode, press INC, then DEC and hold both down for three seconds. (The pump will run at a 120 ml/hr equivalent rate but the displays will read 888 ml/hr and 8888 ml). At this rate, the pump rotor will turn periodically such that it makes a full revolution in six run/stop cycles (12 second for 1 full revolution).
3. Press any key except ON or OFF. (Each time a key is pressed or a drop blocks the sensor, the motor stops, the alarm sounds, and all LEDS light.) Check each key.
4. Pass a pencil or finger through the Drop Sensor and look for all four LEDs to light and the alarm to beep.
5. Press the OFF key and hold momentarily to leave test mode.

NOTE:

Any failure indicates a service check must be performed to locate the malfunction.

Display Test Mode

Perform the test as follows:

1. Enter test mode as usual, then press and hold down INC and DEC again. The VOLUME display will flash a few times, then the display will change to 012 ml/hr and 3456 ml, while the motor runs at a 120 ml/hr rate.

2. Press any key except ON or OFF. Each time a key is pressed, the display will shift left one position.

3. Check for correct display of the digits 0 through 9 in every position.

4. Check that the LOW BAT, BAT, and DOSE COMPlete LEDs light when 1, 2 and 3 respectively, are in the left most digit position.

5. Check that the OCCL/EMPTY LED lights only when the drop sensor is blocked.

6. Press the OFF key and hold momentarily to leave test mode.

Motor Speed Test

Because of the digital nature of stepper motors, it is sufficient to measure one rate setting to verify correct motor operation. Check motor speed by measuring the time required for the pump to make ten revolutions at 120 ml/hr. This is most easily accomplished while in the Test Mode, as described above. At 120 ml/hr, ten revolutions take from 117 to 122 seconds.

Occlusion Alarm Test

Without the drip chamber in place, set the Rate to 295 ml/hr and press RUN/HOLD to start the pump. An occlusion alarm should occur after 5 revolutions of the rotor. As a second check, the Volume display should display "2" ml as the alarm occurs.

Memory Test

Press ON to turn the pump On. Select new Infusion Rate by pressing INC or DEC. Select new Dose Limit by pressing DOSE LIMIT SET and then press INC or DEC within next 3 seconds. Remember these settings. Press OFF then press ON. Verify that pump settings were recalled properly to the same values before the pump was turned OFF.

NOTE:

Any failure indicates a service check must be performed to locate the malfunction.

CHAPTER 4
QUANTITATIVE SYSTEM TEST

Flow Rate Accuracy Test

Perform the following procedure to ensure that the feeding formula system is operating accurately:

Equipment needed:

1. Calibrated stopwatch or timer
2. Approved pump set
3. Graduated metric cylinder (Pyrex brand by Corning Glass, Series #3022 or equivalent.) The required specifications are:

Capacity.....	500 ml
Resolution.....	5.0 ml
Total Error (full range).	2.6 ml, max.

1. Set up pump for normal operation, as outlined on page Water may be used for fluid.
2. Be sure not to overfill drip chamber. Remove bubbles and fill entire line with fluid.
3. Adjust bag height so that fluid level is 24" (610 mm) above center of pump rotor.
4. Turn on pump and set 200 ml/hr rate.
5. Place distal end of tubing into empty cylinder. Adjust distal end to 24" (610 mm) below center of pump rotor. Start stopwatch at the same time as you press RUN/HOLD.
6. Run test for exactly two hours.
7. Check volume of fluid, it should be within +/-10% (360ml - 440ml).

Electronics Test

This procedure checks system operation in detail.

Equipment needed:

1. Digital Storage Scope (Tektronix 2230 or equivalent)
2. DMM (Beckman DM10 or equivalent)
3. Variable voltage power supply (Power/Mate Corp. BPA 40 or equivalent)

WARNING

120 VAC IS PRESENT INSIDE PUMP. USE DUE CAUTION WHEN CASE IS OPEN. BE CAREFUL NOT TO DISCONNECT J1, J2, OR J3.

Electronics Test (Continued)

1. Enter Test Mode

   a) Plug the AC power cable into a 115 VAC receptacle.
   b) Install and fill a pump set
   c) Press the ON key
   d) Press the INC, then the DEC keys and hold both for 3 seconds.

2. Check Numerical Displays

   a) While in Test Mode verify all display segments are lit uniformly, displaying "888" ml/hr and "8888" ml.

3. Check Drop Sensor

   a) While in Test Mode, verify that OCCL/EMPTY, LOW BAT, DOSE COMPLETE, and BAT LEDs blink and the alarm sounds for every drop passing sensors.

4. Check Keypad Keys

   a) In Test Mode, press each key (except On & OFF) several times and check for a beep with each press.

5. Check Audible Alarm

   a) Exit Test Mode by turning pump off then on again Remove drip chamber.
   b) Set Rate at 295 ml/hr and start pump (press RUN/HOLD)
   c) At 5 revolutions of the rotor, the audible alarm should begin beeping and the Volume/Dose display should read "2" ml.
   d) While the alarm is sounding, adjust the volume knob mounted to the rear of the case and verify that the sound level varies.

6. Check AC/Battery Sensing

   a) With the pump in Hold (or Run) Mode and the AC line cord plugged into an outlet, verify that the BAT LED is extinguished.
   b) Remove the AC line cord from the outlet and verify that the BAT LED lights within a few seconds (if battery is not fully charged, it may take up to a few minutes to charge the battery up to the threshold point).

7. Check Low Battery Sensing

   a) With the pump turned off, remove the (+) connection from the battery
   b) Adjust the variable power supply to 12VDC, turn supply off, then connect (+) lead to D10 cathode and (-) lead to D5 anode(GND).
   c) Turn supply on, and press ON.
   d) Verify the LOW BAT LED is off
   e) Decrease the voltage gradually and note the voltage when LO BAT illuminates. The trip point should be in the range 10.8 - 11.6 VDC.

8. Electrical Measurements

There are no adjustments present on the PC board. However, proper circuit performance may be checked by measuring voltages present on the PC board. (The pump should be plugged into a proper AC outlet and should be set in the Functional Test Mode, with no set installed.) The anode of D5 or D7 provides a convenient DC ground point. The battery should be fully charged prior to measurements.

Nominal Voltages Present at:	
a) Full wave rectified input (Cathode D4)	16.5 VDC
b) V+ (Cathode D8)	15.7 VDC
c) B+ (Cathode D10)	13.2 VDC
d) Input Voltage to 5V DC to DC Converter (U16 pin 7)	15.7 VDC
e) 5V DC to DC Converter output (U16 pin 10)	5.0 VDC
f) Reference Voltage (U15 pin 5)	2.5 VDC
g) Battery Charger Voltage (Anode D10)	14.0 VDC
h) Drop Detector Source Modulation (U2 pin 5)	14 KHZ Sq. Wave 3.8V P-P
i) Drop Detector Receiver Tank Circuit (U2 pin 3)	14 KHZ
j) Drop Detector Output (U2 pin 8)	.03 VDC
k) Motor Drive Signals (U5 pin 6) pulse train in test mode (30 pulses) repeating every 2 seconds	15.5V P-P 24 mS between each pulse

CHAPTER 5
THEORY OF OPERATION

General

The pump controller is a single printed circuit board that provides electronic control of a rotary stepper motor which drives a peristaltic fluid pump. The pump controller also provides an electronic interface to the keypad and display panel, from which INFUSION RATE and DOSE LIMIT may be specified and system operation may be monitored.

The pump controller and associated components are interconnected by a system wiring harness and are housed in a standalone, portable chassis. Functional components external to the pump controller include: motor, keypad, Display panel, drop sensor, audible alarm, volume control, battery, AC power cord, transformer, and fuse.

Software Description

At turn-on, a reset pulse is generated to start the processor at a known address in the software. The processor then steps sequentially through the software performing different tests (ROM checksum, RAM test, EEPROM Parameter redundancy test, etc..) and system initialization. Any errors found would cause an alarm to sound and the pump to turn itself OFF. At the successful completion of these tests, Previous data for INFUSION RATE, VOLUME DELIVERED, and DOSE LIMIT are read from EEPROM, validated and displayed. The pump then generates one pulse of the audible alarm signal and is put in the HOLD mode.

At entry to Hold Mode, the motor is turned off. The processor continually scans the keyboard, flow sensor, battery status and sequentially refreshes the displays. Input from the keyboard is used to change the parameters. The user may enter a new Infusion Rate (via INC or DEC), set a new Dose Limit value (via DOSE LIMIT SET), or reset the Volume Delivered counter (via Volume Reset). RATE may be set between 1 and 295 ml/hr and DOSE LIMIT between 0 and 9995 ml. A DOSE LIMIT of 0 disables the DOSE LIMIT function.

On Model 199235, if the unit is kept in the HOLD state without any key activity for 2.5 minutes, the system sounds the alarm. This is used as a reminder to the operator that Run Mode has not been initiated. Depressing the RUN/HOLD button resets the alarm.

On Model 199240, the system can be left in HOLD mode indefinitely.

The RUN mode is entered from the HOLD mode by pressing the RUN/HOLD key. Pressing the RUN/HOLD key again returns the system to the HOLD mode. In RUN mode, the motor is driven is driven in an on/off manner with four signals pulsed sequentially to turn the motor in a counterclockwise direction. The time between pulses is set to 6 ms. The pulse train repeats periodically (every 2 seconds) independent of the programmed rate. The number of pulses in a pulse train is equal to the programmed pump rate. The motor will run at the appropriate speed for an equivalent 2 ml during which time the Drop Sensor is disabled to allow any final priming of the feeding set. If no activity is seen by

the sensor during this time, an OCCL/EMPTY alarm is generated. After this initial period is over, the software begins monitoring the Drop Sensor and counting each drop. The flow sensor counts the number of drops delivered during each milliliter. If flow is correct, the motor continues to run. Otherwise the system enters the alarm state and an OCCL/EMPTY alarm is generated. Normally an empty feeding bag will cause this condition.

If a Dose Limit has been set, the microcomputer continuously compares Volume Delivered to the Dose Limit and, if equal to or greater than Dose Limit, a Dose Complete Alarm occurs, where the alarm beeps two times and the pump remains in a non-pumping state flashing the DOSE COMPlete LED.

The battery voltage is checked and the LOW BAT LED is lit when the voltage drops below a specified level. If the voltage remains low for 15 minutes, a Low Batt Alarm is generated and pumping stops.

If DOSE LIMIT SET is pressed during Run, the current Dose Limit value is displayed for a few seconds on the Volume/Dose display. If RUN/HOLD is pressed, pumping stops and the unit enters Hold Mode. If any other key is pressed during Run a beep will occur signalling an invalid key press and the key is ignored.

In Alarm Mode the controller stops the motor, flashes both displays, beeps the alarm at a 1Hz rate, and flashes the appropriate indicator LED. The LEDs which are active flash in time with the displays and indicate the cause of the alarm. Note that the pump is alarming for low battery if both the BAT and LOW BAT LEDs are on (BAT is merely an indication that the AC line cord is not plugged into a receptacle.) When RUN/HOLD is pressed, the pump silences the audible alarm and enters Hold Mode.

The pump has built in test modes. Three test modes are available:

1) Functional Test Mode - This test functionally checks the motor, microcomputer, display, keyboard and drop detecting circuit. To enter test mode, press INC and DEC for few seconds. The pump will run at a 120 ml/hr rate but the displays read 888 ml/hr and 8888 ml. Each time a key is pressed (except ON) or when the sensor is interrupted, the motor stops, all alarm LED's light, and the audible alarm beeps. Press the OFF key and hold momentarily to leave this test mode.

2) Display test mode - This test checks for short-circuits between display elements. It is primarily useful to the manufacturer. To perform this test, enter the Functional Test Mode as above, then press and hold down INC and DEC again. The display will read 012 ml/hr and 3456 ml, while the motor runs at a 120 ml/hr rate. Each time a key is pressed (except ON) the display will shift left one position. The digits 0

through 9 are all tested. Check for correct display of every digit in every position. Check that the LOW BAT, DOSE LIMIT and BAT LED's light when 1, 2, and 3, respectively, are in t left most digit position. Check that the OCCL/EMPTY LED lights only when the drop sensor IR beam is blocked. Press the OFF key and hold momentarily to leave this test mode.

3) Software Revision test mode - This test displays the software revision being used in the pump. It is primarily useful to th e manufacturer. To perform this test, enter the Functional Test Mode as above, then enter the Display test mode as above, then press and hold down INC and DEC again. The Rate Display will display an " r" and the Volume Delivered Display will display the software revision being used by the pump. Example: " r" " 130" would indicate that software revision 1.30 is being used by the pump. Press the OFF key and hold momentarily to leave this test mode.

If at anytime the OFF key is depressed, it is sensed by the processor. The processor then tests three parameters; INFUSION RATE, VOLUME DELIVERED and DOSE LIMIT. If the value stored in EEPROM is the same, it checks the next value. If any of the parameters have changed, the EEPROM is updated. Once all of the parameters are tested, the processor turns the system OFF.

Data stored in the EEPROM will remain indefinitely even if the AC power and the battery both are removed.

Hardware Description

The Enteral Feeding Pump is a microcomputer based system designed to deliver precise rates of liquid nutrient selected by the operator.

Figure 1 shows a block diagram of the system. For more detailed information, refer to the schematics in Appendix A-1.

Power for the pump is provided by either line voltage or the internal lead acid battery. The battery is recharged by the line voltage independent of the operation of the pump. The line voltage is stepped down by means of the transformer and full wave rectified and filtered by D4-D7 and C9. This raw DC voltage is used to power the battery charger (U15), stepper motor driver (U5) and the on/off flip flop (U3). When line voltage is present transistor Q8 is on (saturated) providing a logic zero to the microcomputer, indicating that AC voltage is present to operate the pump and charge the lead acid battery. The raw DC voltage is provided via D8 or D9 (whichever is greater). This allows the pump to automatically switch to battery operation if the AC line is disconnected.

The lead-acid battery is rated as a 12 volt, 1.2 amp-hour power source and is fused at 2 amps by F1 mounted to the PC board. The battery is charged by a constant voltage, current limited voltage regulator consisting of U15, Q5, CR1 and resistor R27. The voltage reference and 1% (R28 and R29) resistors set the charge voltage on the cathode of D10 at approximately 13.5 volts and R27 sets the current limit to approximately 230 mA. CR1 provides a stable voltage reference of 2.5 volts. D10 isolates the charges circuits from the battery during battery operation of the pump.

A DC/DC converter steps down the nominal 12 vdc to +5vdc. A converter is used for greater efficiency to extend battery run time between chargings. The ON and OFF keys control 12 vdc power to the converter.

The converter provides +5 vdc power for the microcomputer, logic, EPROM and displays. When power is applied, the processor initializes all system functions. These system functions include the infusion motor and displays. The motor is turned off and previous operating parameters are recalled from nonvolatile memory and displayed. Nonvolatile memory is EEPROM internal to the microcomputer.

The operating parameters which are saved in EEPROM are INFUSION RATE, VOLUME DELIVERED and DOSE LIMIT.

Infusion of nutrient is precisely controlled and displayed by the microcomputer. The nutrient is pumped by a stepper motor rotating at precise speeds controlled by signals from the microcomputer. The microcomputer sets the motor average speed relative to the INFUSION RATE. The INFUSION RATE, along with VOLUME DELIVERED and DOSE LIMIT are displayed on the two LED displays.

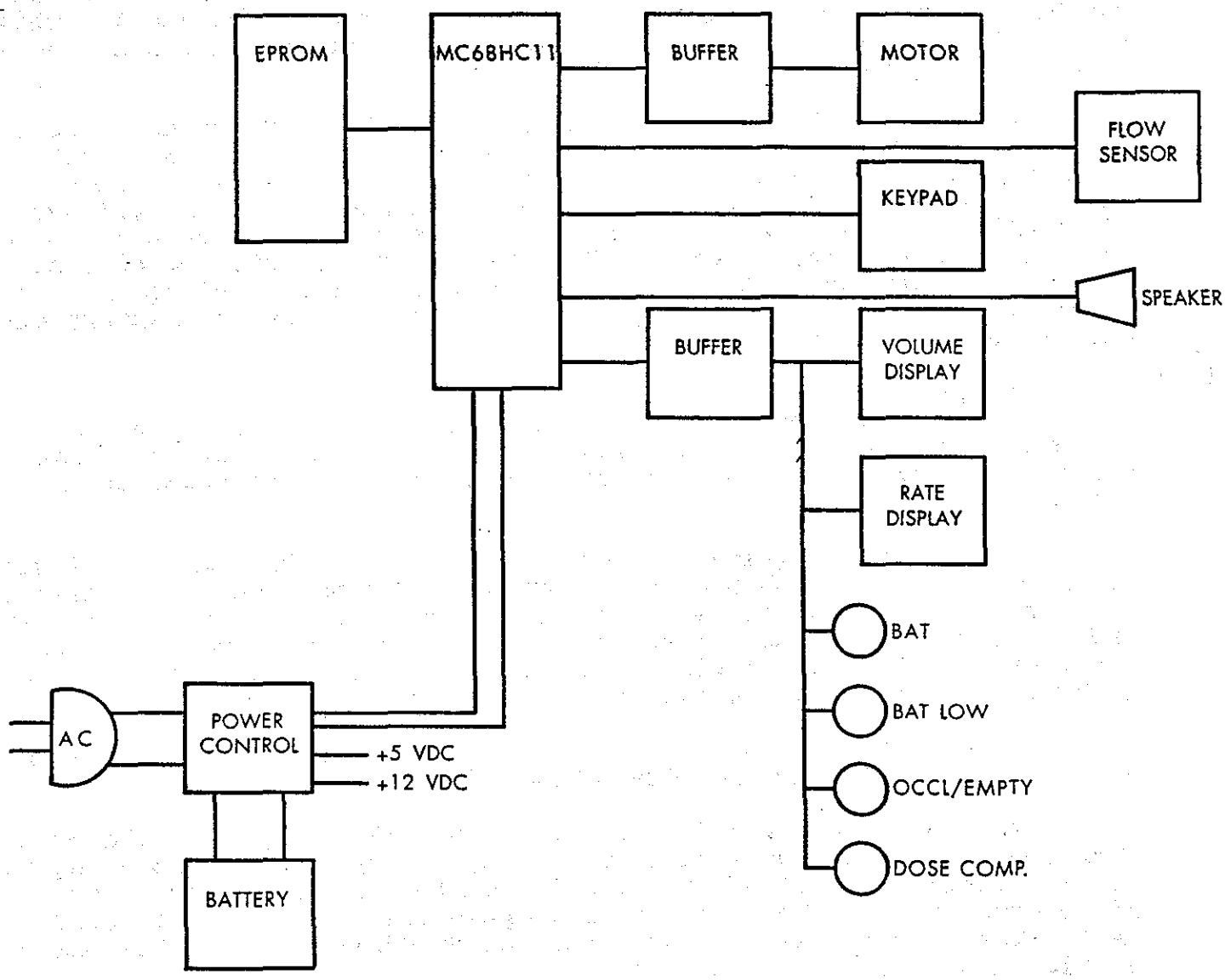

Figure 5-1
Circuit Block Diagram

Hardware (continued)

Flow of nutrient is detected by an LED light source and photo-detector. Immunity to ambient light interference is derived by modulating the source diode and detecting this signal on the phototransistor with tone decoder U2. R14 and C5 establish a 14 khz modulation frequency which is used to gate the source IR diode via D1, R9, and Q1. When no drop is present the source modulation is coupled to the detecting phototransistor. A 14 khz, parallel resonant circuit comprised of L1, C2, and R10 forms a bandpass around this frequency and allows the detected modulated signal to develop. This bandpass filter prevents noise due to ambient light from passing thru. The detected modulated signal is detected by the tone decoder, U2. When the signal is detected the output of U2, pin 8 goes to a logic low which turns off Q2, allowing the collector to go to 5 volts (logic high). If a drop blocks the path of the infrared light, it suppresses the modulation signal which causes U2 circuits to unlock driving pin 8 high which turns on Q2 and provide a latched logic low the microcomputer indicating a drop has occurred. The microcomputer unlatches the phase-lock circuit by driving FRESET\ low for a brief interval through D3.

When the motor is running, each drop of nutrient is detected and sensed by the microcomputer. If no drops are sensed (continuous stream also is detected as no drops) or if the number of drops per milliliter is higher or lower than expected, an alarm mode, discussed above, is entered. U4 is used as a variable voltage source to the beeper which is controlled by the alarm volume potentiometer.

System status is indicated by the LEDs. The processor via U8 and U14, sends the necessary strobe signals to turn the appropriate segments on the display panel. The BAT light indicates the system is operating on battery when illuminated. The BAT LOW light indicates the battery is discharged and should be charged. The OCCL/EMPTY light indicates the nutrient flow is not correct when illuminated. The DOSE/COMP light indicates that the preset dose has been delivered.

The battery is checked periodically to determine if the voltage is within operating range. The voltage is checked by an analog-to-digital converter internal to the processor. If the voltage is lower than a first threshold, the LOW BAT light is illuminated. IF the LOW BAT condition exists for 15 minutes, or if the voltage drops below a second threshold, the motor is then stopped and the alarm is sounded. If the voltage reaches a third threshold, the device automatically turns itself OFF.

CHAPTER 6
TROUBLESHOOTING

Troubleshooting

The Compat enteral formula feeding pumps are reliable electromechanical devices. The following tips will help you to correct problems that may arise. Read "Routine Maintenance Section" before opening pump case.

*** CAUTION - Remove AC line cord from receptacle before attempting to open the pump housing

Situation	Possible Cause	Solution
*OCCL/EMPTY alarm is activated	*Pump is on hold for more than 2 1/2 minutes	*Press RUN/HOLD key to return to hold mode.
	*Feeding container is empty.	*Replace or refill feeding container.
	*Occlusion is restricting flow.	*Identify point of occlusion. -Pump set: *Closed TUBING CLAMP *Kinked tubing. *Blocked tubing. -Feeding Tube -Feeding container
	*DRIP CHAMBER walls coated with formula.	*Replace pump set.
	*DRIP CHAMBER not properly placed in pump.	*Assemble properly.
	*Too much fluid in DRIP CHAMBER.	*Invert container and clear fluid from DRIP CHAMBER.
	*Drop sensor parts need cleaning.	*Clean with cotton swap dampened with warm soapy water.
	*Drip chamber in direct sunlight.	*Move pump into shade.
	*Battery run down. (LOW BAT is on.)	*Charge battery immediately
	*Poor harness connections.	*Check and repair J2 and both small connectors.

Troubleshooting (Continued)

Situation	Possible Cause	Solution
*OCCL/EMPTY alarm activated (Continued)	*Drop sensor parts not in place.	*Parts must be snapped into place on their respective sides, so that the lenses are visible.
*LOW BAT LED always on.	*Battery charge is below performance level.	*Batteries that have been left discharged may require 1-2 charge/ discharge cycles to operate at rated capacity. Batteries are normally good for at least 2 years, 200 full discharges or 300 partial discharges (whichever comes first) Replace the battery if necessary.
*BAT LED	*Line fuse blown.	*Replace 1/4a fuse with same type.
	*Poor wire harness connections.	*Check & repair J3
*Rate change alarm activated.	*INC, DEC, or TOTAL RESET pressed while pump in run mode.	*Press RUN/HOLD once to stop pump, before pressing other keys.
*AC operation only.	*Battery over-discharged	*Charge or replace battery.
	*F1 blown.	*Replace with mfg supplied fuse only.
	*Poor harness connections.	*Check & repair J3 and battery spade lugs.
*DOSE COMPLETE	*Pump has delivered present volume.	*Press VOLUME RESET. Press RUN/HOLD key. Pump will operate until dose is completed again.
*No power. (no displays.)	*No AC	*Check AC outlet and fuse
	*Keypad not connected.	*Check J1 connection.
	*Poor harness connections.	*Check and repair J3, pins 2,3,7,8.

Troubleshooting Guide (Continued)

Situation	Possible Cause	Solution
*No audible alarm.	*Poor harness connections.	*Check and repair J3
*Motor hesitates or fails to turn.	*Bent shaft, ROTOR rubbing against case.	*Straighten shaft.
	*Poor harness connections.	*Check and repair J2
*Rate is low.	*Rollers sticking.	*Clean ROTOR and rollers.

APPENDIX A

Printed Circuit Board Schematics. A-1

Printed Circuit Board Layout A-3

Printed Circuit Board Parts List. A-4

Wiring Harnesses. A-7

Wiring Harness - Parts list A-10

Mechanical Assembly A-11

Mechanical Assembly Parts List. A-13

DATE	SYM	REVISION RECORD	DR	CK
4-19-91	A	RELEASED		
12-11-91	B	REVISED C2 AND B+		

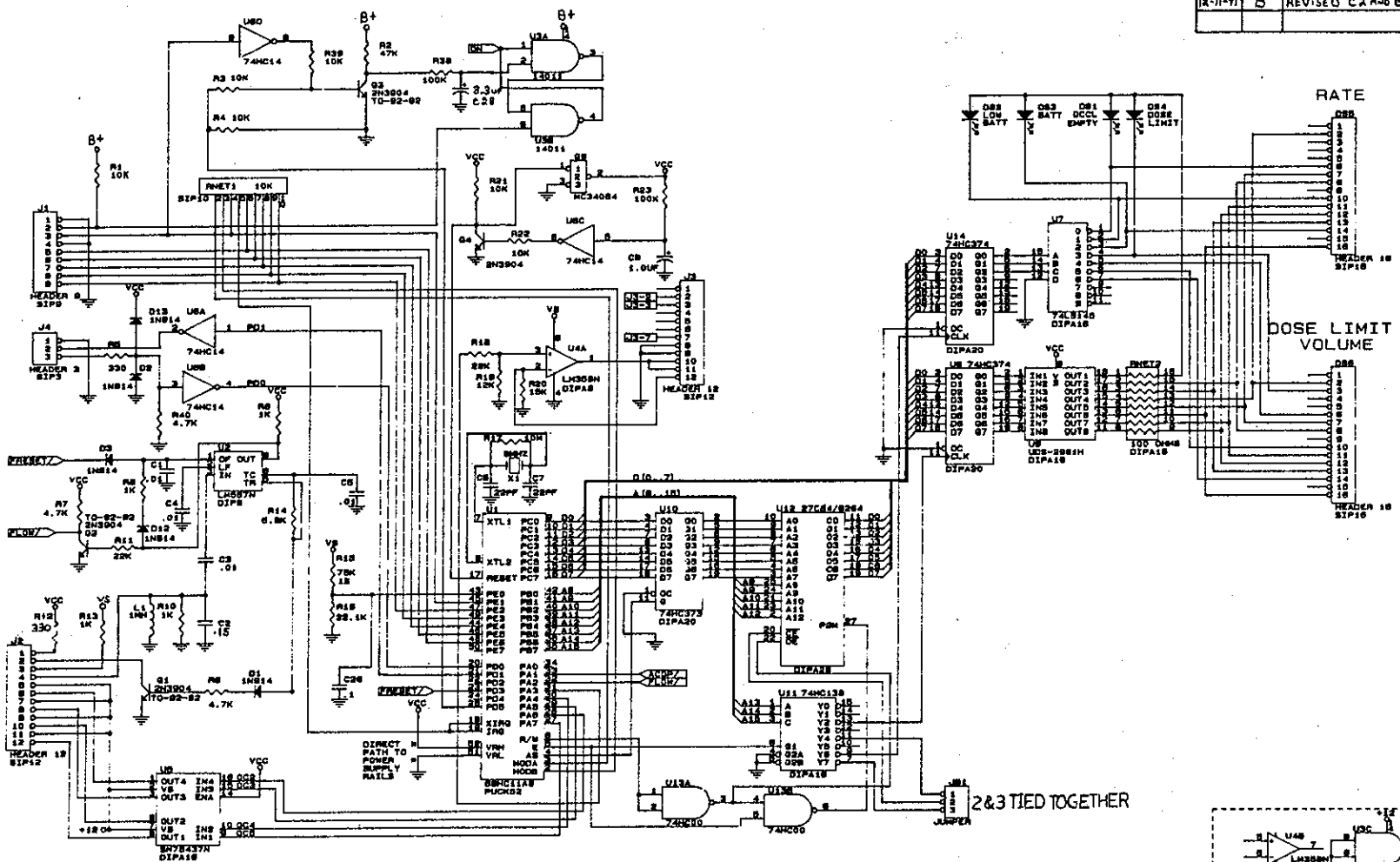

POWER PLANE

U1, 26	U14, 20
U2,4	U15
U3	U16
U4	RNET1,1
U5, 11	
U6, 14	
U7, 16	
U8, 20	
U9	
U10, 20	
U11, 16	
U12, 1,26&28	
U13, 14	

GROUND PLANE

U1, 1	U14,10
U2, 7	U15
U3,7	U16
U4	
U5,4,5,12&13	
U6,7	
U7, 8	
U8,10	
U9,10	
U10,10	
U11,8	
U12,14	
U13,7	

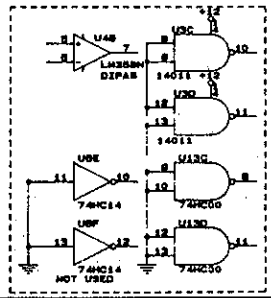

SANDOZ NUTRITION

SCHEMATIC, 199235/199240

Size C | Document Number SN 3500 | REV B

Date: December 18, 1991 | Sheet 1 of 2

A-1

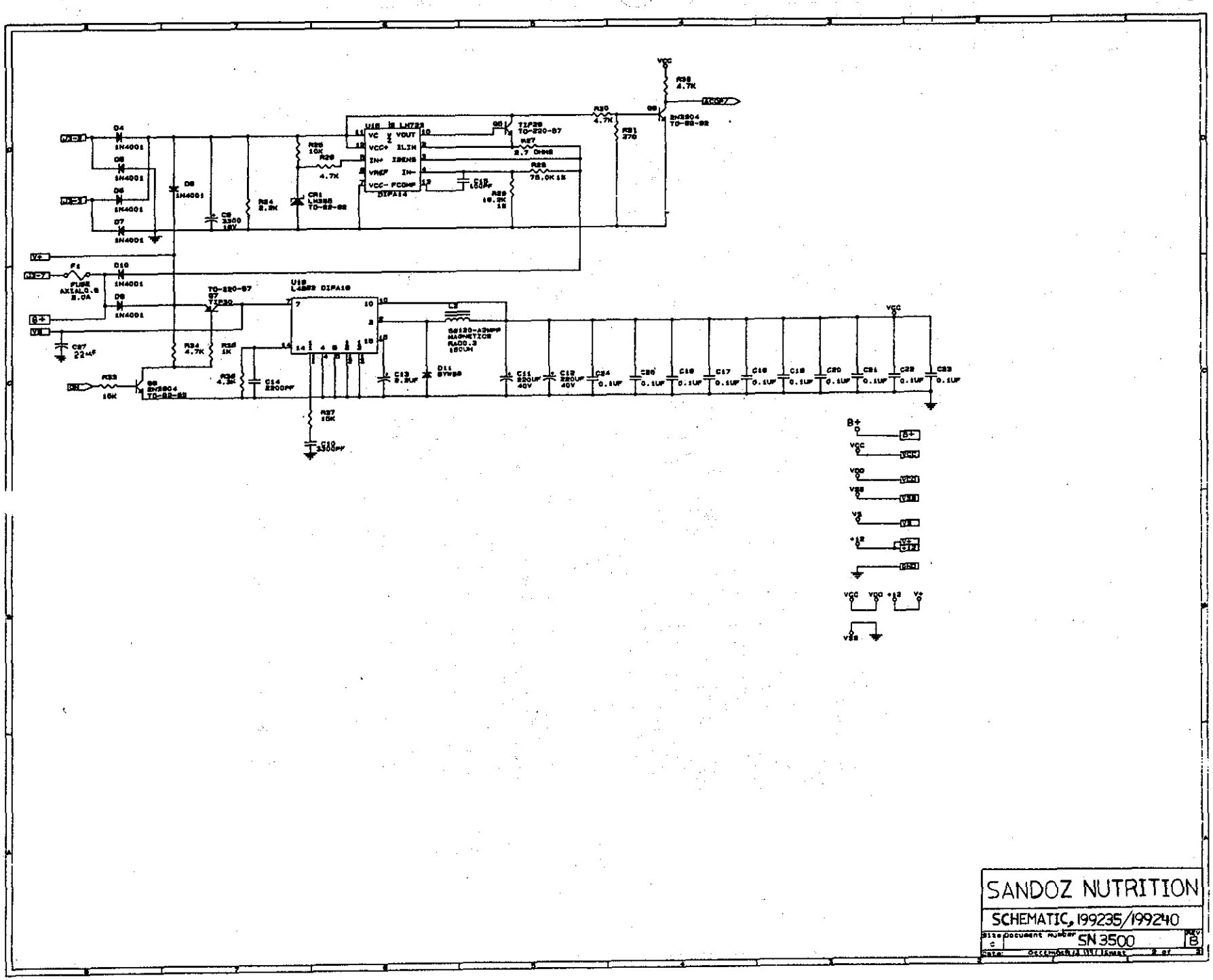
SANDOZ NUTRITION
SCHEMATIC, 199235/199240
SN 3500
B

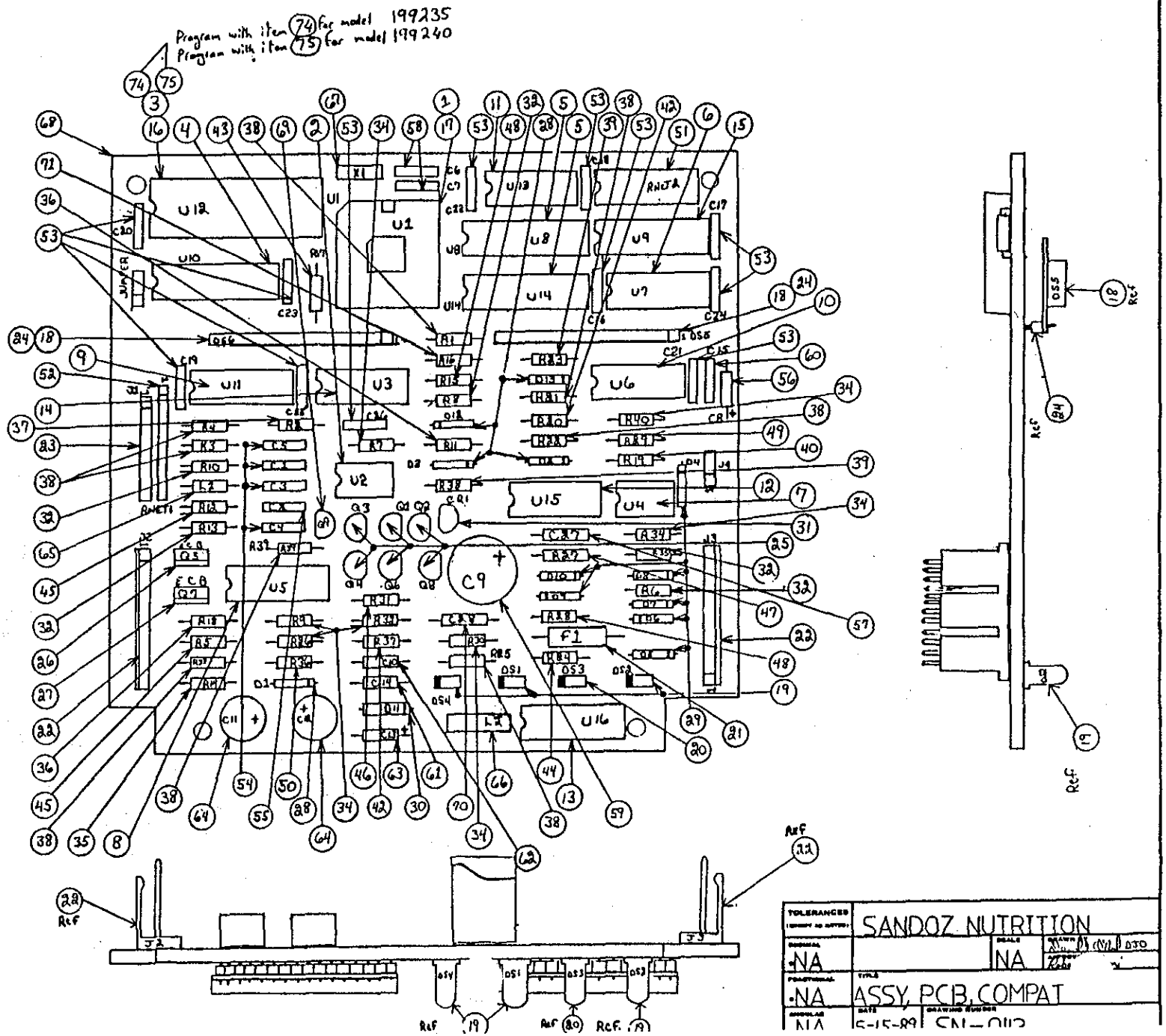
REVISION RECORD
RELEASED
Program with item 74 for model 199235
Program with item 75 for model 199240
TOLERANCES
SANDOZ NUTRITION
NA
NA
NA
ASSY, PCB, COMPAT
NA
5-15-89
SN-0112

PRINTED CIRCUIT BOARD PARTS LIST

ITEM	PART NUMBER	REFERENCE DESIGNATION	DESCRIPTION
1	SN-200	U1	MICROCOMPUTER, 52 PIN
2	SN-201	U2	DETECTOR
3	SN-202	U12	8KX8,E-PROM,250 NS
4	SN-203	U10	OCTAL LATCH
5	SN-204	U8,U14	OCTAL LATCH
6	SN-205	U7	DISPLAY DRIVER
7	SN-206	U4	OP AMP
8	SN-207	U5	MOTOR DRIVER
9	SN-208	U11	DECODER
10	SN-209	U6	HEX INVERTER
11	SN-210	U13	QUAD, NAND GATE
12	SN-214	U15	VOLTAGE REGULATOR
13	SN-215	U16	DC/DC CONVERTER
14	SN-219	U3	NAND GATE
15	SN-221	U9	CURRENT DRIVER
16	SN-222	U12	SOCKET, 28 PIN
17	SN-223	U1	SOCKET, 52 PIN LCC
18	SN-211	DS5,DS6	DISPLAY LED
19	SN-212	DS1,DS2,DS4	DISPLAY, LED, YELLOW/AMBER
20	SN-213	DS3	DISPLAY, LED, GREEN
21	SN-220	F1	FUSE, 2A
22	SN-216	J3,J2	HEADER, 12 PIN
23	SN-217	J1	HEADER, 9 PIN

ITEM	PART NUMBER	REFERENCE DESIGNATION	DESCRIPTION
24	SN-218	DS5,DS6	SOCKET, 16 PIN
25	SN-224	Q1-Q4,Q6,Q8	TRANSISTOR 2N3904
26	SN-225	Q5	TRANSISTOR
27	SN-226	Q7	TRANSISTOR
28	SN-228	D1-D3,D12,D13	DIODE, 1N914B
29	SN-227	D4-D10	DIODE, 1N4001
30	SN-230	D11	DIODE, 3A SCHOTTKY
31	SN-229	CR1	VOLTAGE REFERENCE
32	SN-231	R8,R10,R13,R35,R6	RES, 1K,1/4W, 5%., CF
34	SN-233	R9,R7,R26,	
34	SN-233	R30,R32,R34,R40	RES, 4.7K, 1/4W, 5%., CF
35	SN-234	R14	RES, 6.8K, 1/4W, 5%., CF
36	SN-235	R11,R18	RES, 22K, 1/4W, 5%., CF
37	SN-236	R2	RES, 47K, 1/4W, 5%., CF
38	SN-237	R1,R3,R4,R21,	
38	SN-237	R22,R25,R33,R39	RES, 10K, 1/4W, 5%., CF
39	SN-238	R23,R38	RES, 100K, 1/4W, 5%., CF
40	SN-239	R19	RES, 12K, 1/4W, 5%., CF
42	SN-241	R20,R37	RES, 15K, 1/4W, 5%., CF
43	SN-242	R17	RES, 10 MEG, 1/4W, 5%.,CF
44	SN-243	R24	RES. 2.2K, 1/4W, 5%., CF
45	SN-296	R5,R12	RES, 1/4W, 5%., CF, 330 OHM
46	SN-244	R31	RES, 270 OHM, 1/4W,5%., CF
47	SN-245	R27	RES, 1/2W, 5%., CF, 2.7 OHM
48	SN-246	R15,R28	RES, 75K, 1%., 1/4W, MF

ITEM	PART NUMBER	REFERENCE DESIGNATION	DESCRIPTION
49	SN-247	R29	RES, 16.2K, 1%., 1/4w, MF
50	SN-248	R36	RES, 4.3K, 1/4W, 5%., CF
51	SN-249	RNET2	RESISTOR NETWORK 100 OHM
52	SN-294	RNET1	RESISTOR NETWORK 10K OHM
53	SN-250	C16-C26	CAPACITOR, .1UF
54	SN-251	C1,C3-C5	CAPACITOR, .01UF
55	SN-255	C2	CAPACITOR, .15UF
56	SN-253	C8	CAPACITOR, 1UF
57	SN-254	C27	CAPACITOR, 22UF
58	SN-297	C6,C7	CAPACITOR, 22PF
59	SN-256	C9	CAPACITOR, 3300UF
60	SN-257	C15	CAPACITOR, 100PF
61	SN-258	C14	CAPACITOR, 2200PF
62	SN-259	C10	CAPACITOR, 3300PF
63	SN-260	C13	CAPACITOR, 2.2UF
64	SN-261	C11,C12	CAPACITOR, 220 UF
65	SN-262	L1	INDUCTOR, 1.0MH
66	SN-263	L2	INDUCTOR, 150UH, 2A
67	SN-264	X1	CRYSTAL, 8 MHZ, HC-18
68	SN-293		P C BOARD BLANK
69	SN-301	Q9	VOLTAGE SENSOR
70	SN-300	C28	CAPACIATOR, 3.3 UF
71	SN-298	R16	RES, 1/4W, 1%., MF, 22.1K
74	SN-3400-35		SOFTWARE MODEL 199235
75	SN-3400-40		SOFTWARE MODEL 199240

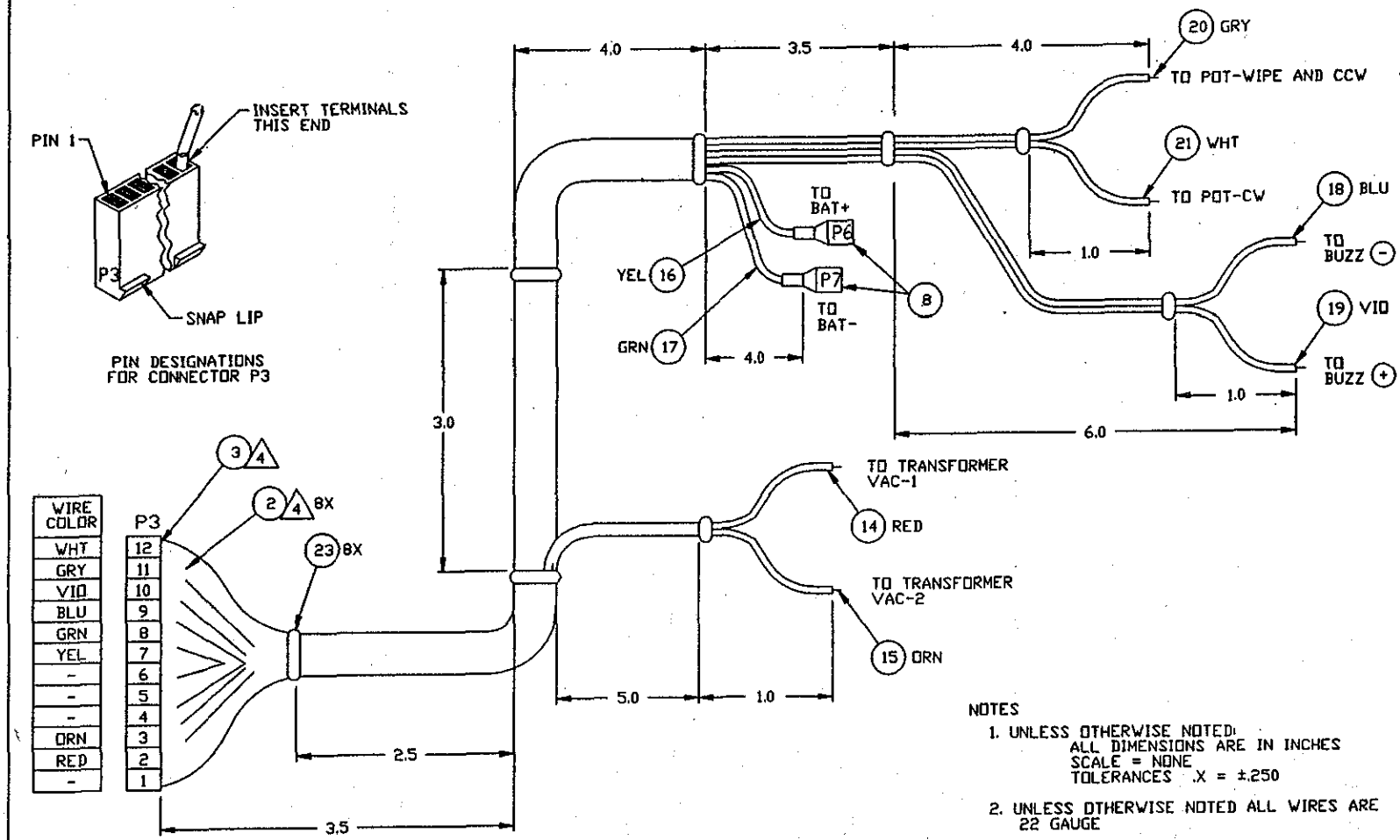

WIRE COLOR	P3
WHT	12
GRY	11
VIO	10
BLU	9
GRN	8
YEL	7
-	6
-	5
-	4
ORN	3
RED	2
-	1

NOTES

1. UNLESS OTHERWISE NOTED:
   ALL DIMENSIONS ARE IN INCHES
   SCALE = NONE
   TOLERANCES .X = ±.250
2. UNLESS OTHERWISE NOTED ALL WIRES ARE 22 GAUGE
3. DIMENSIONS INDICATE WIRE RUN LENGTHS BETWEEN LOCATIONS SHOWN
4. CRIMP TERMINAL (2) ON EACH WIRE AND INSTALL IN SOCKET (3)
5. MATERIAL PER SN0141

SANDOZ NUTRITION
P.O. BOX 370
MINNEAPOLIS, MINNESOTA 55440
612-925-2100

APPROVALS	DATE	INITIAL
DRIG DWG BY	896213	KFISHEL
SANDOZ APPROVAL		

NO.	REVISIONS	ECO	DATE	INITIAL
A	RELEASED	-	890519	B.RAMI
B	ADDED NOTE 5	-	891120	B.RAMI
-	-	-	-	-
-	-	-	-	-

DRAWING TITLE: HARNESS, WIRING, CIRCUIT BO/ EN L FEEDING PUMP

DRAWING NO. FILE NO 9275.002
SN0111

PLOT DATE 11/28/89

SHEET -

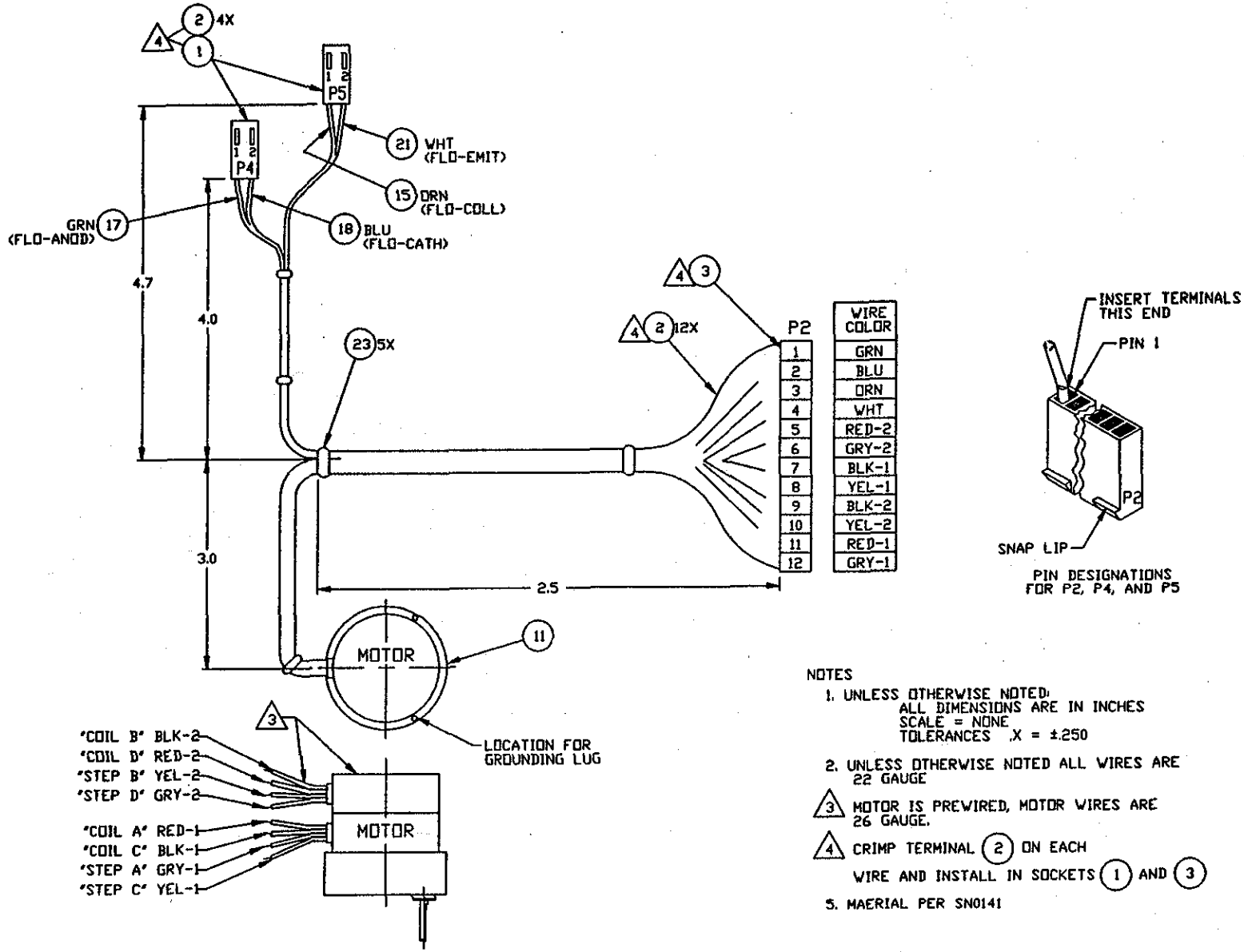

NOTES

1. UNLESS OTHERWISE NOTED:
   ALL DIMENSIONS ARE IN INCHES
   SCALE = NONE
   TOLERANCES .X = ±.250
2. UNLESS OTHERWISE NOTED ALL WIRES ARE 22 GAUGE
3. MOTOR IS PREWIRED, MOTOR WIRES ARE 26 GAUGE.
4. CRIMP TERMINAL (2) ON EACH WIRE AND INSTALL IN SOCKETS (1) AND (3)
5. MAERIAL PER SN0141

SANDOZ NUTRITION

P.O. BOX 370 MINNEAPOLIS, MINNESOTA 55440 612-925-2200

APPROVALS	DATE	INITIAL
DRG DWG BY	890213	MFISHCL
SANDOZ APPROVAL		

NO.	REVISIONS	ECO	DATE	INITIAL
A	RELEASED	-	890509	BRANE
B	ADDED NOTE 5	-	891120	BRANE
-	-	-	-	-
-	-	-	-	-

SCALES SHOWN ABOVE

DRAWING TITLE: HARNESS, WIRING, MOTOR ENTERAL FEEDING PUMP

DRAWING NO: FILE NO 9275.002 SN0112

PLOT DATE 11/28/89

SHEET 1 OF 1

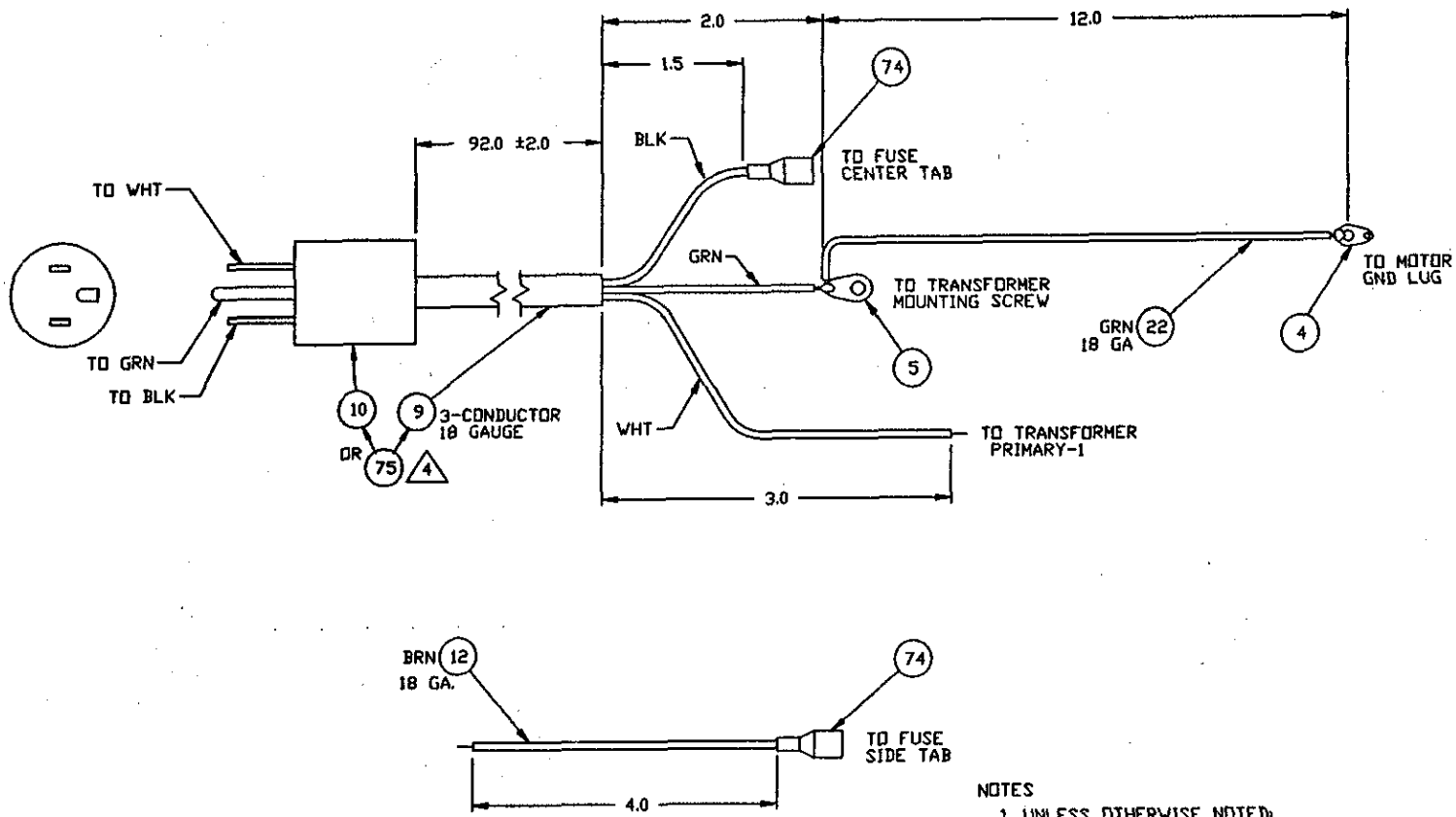

NOTES

1. UNLESS OTHERWISE NOTED:
   ALL DIMENSIONS ARE IN INCHES
   SCALE = NONE
   TOLERANCES .X = ±.250
2. DIMENSIONS INDICATE WIRE RUN LENGTHS BETWEEN LOCATIONS SHOWN
3. MATERIAL PER SN0141
4. USE 9 and 10 IF PURCHASED INDIVIDUALLY
   USE 75 IF PURCHASED AS AN ASSEMBLY

SANDOZ NUTRITION
P.O. BOX 370
MINNEAPOLIS, MINNESOTA 55440
612-925-2100

APPROVALS	DATE	INITIAL
ORIG DWG BY	890214	FISHEL
ABOVE		
SANDOZ APPROVAL		

NO	REVISIONS	ECO	DATE	INITIAL
A	RELEASED	-	890509	B.RANI
B	ITEM (74) WAS ITEM (8), ADDED NOTE 3	-	891120	B.RANI
C	ADDED NOTE 4	-	920221	B.RANI
-	-	-	-	-

DRAWING TITLE: HARN[illegible], WIRING, POWER
COR[illegible]
ENTE[illegible] FEEDING PUMP
-

DRAWING NO: FILE NO 9275.002
SN0140

PLOT DATE 2/21/92

SHEET 1 OF 1

WIRE HARNESSES PARTS LIST

ITEM	DESCRIPTION	PART NO.	QUANTITY
1	SOCKET, 2 PIN	SN-272	2
2	CRIMP TERMINAL	SN-273	24
3	SOCKET, 12 PIN	SN-274	2
4	GROUNDING LUG, #2	SN-275	1
5	GROUNDING LUG, #8	SN-276	1
8	CONN, AMP: 02-520193-2	SN-270	2
9	POWER CORD 18/3-SJT M/E	SN-279	7.67 ft.
10	POWER PLUG	SN-280	1
11	STEPPER MOTOR, UNI-POLAR	SN-267	1
12	WIRE, BRN, 18GA	SN-333	.33 ft.
14	WIRE, RED, 22GA	SN-284	.80 ft.
15	WIRE, ORANGE, 22GA	SN-285	1.52 ft.
16	WIRE, YELLOW, 22GA	SN-286	1.21 ft.
17	WIRE, GREEN, 22GA	SN-287	1.88 ft.
18	WIRE, BLUE, 22GA	SN-288	2.34 ft.
19	WIRE, VIOLET, 22GA	SN-289	1.67 ft.
20	WIRE, GRAY, 22GA	SN-290	1.50 ft.
21	WIRE, WHITE, 22GA	SN-292	1.56 ft.
22	WIRE, GREEN, 18GA	SN-291	1.00 ft.
23	CABLE TIE WRAP	SN-330	13
74	CONN, AMP: 02-520181-2	SN-360	2
75	POWER PLUG WITH CORD	SN-305	1

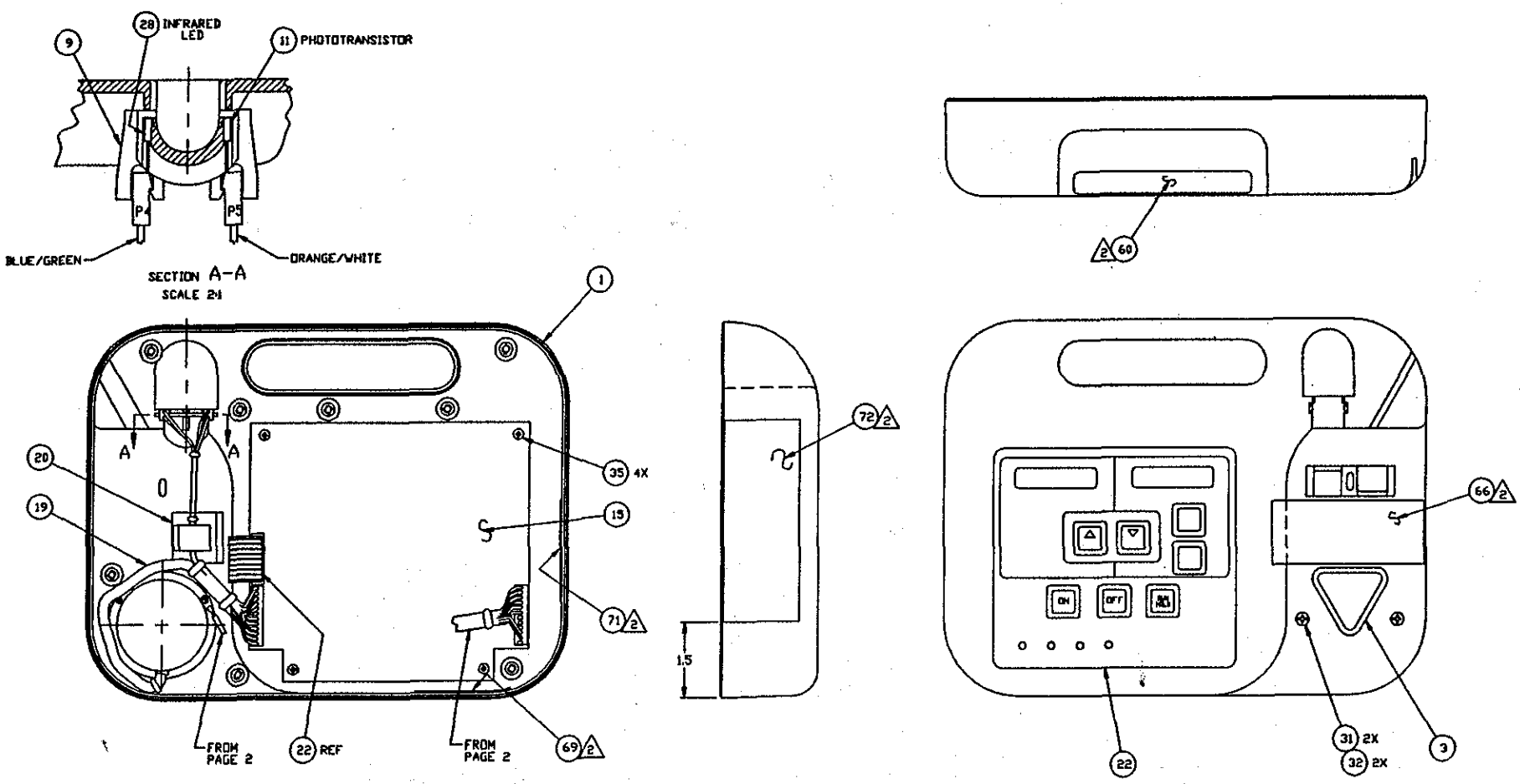

NOTES

1. UNLESS OTHERWISE NOTED:
   ALL DIMENSIONS ARE IN INCHES
   SCALE 1/1
   TOLERANCES .X = ±.03

2. LOCATE APPROX AS SHOWN

3. USE LABEL (64) ON MODEL 199235 AND LABEL (65) ON MODEL 199240.

4. APPLY HEAT SHRINK TUBING

CAD DWG

SANDOZ NUTRITION
P.O. BOX 370 MINNEAPOLIS, MINNESOTA 55440
612-925-2100

APPROVALS	DATE	INITIAL
DRG DWG BY	890216	FISHEL
SANDOZ APPROVAL		

SCALES SHOWN ABOVE

NO.	REVISIONS	ECO	DATE	INITIAL
A	RELEASED	-	890501	BRANE
B	REVISED, MOVED LABELS	-	890827	BRANE
C	REVISED, ADDED BATTERY LABELS	-	920221	BRANE
-	-	-	-	

DRAWING TITLE: ASSY, FINAL, COMPAT

PROJECT NO: -

DRAWING NO: FILE NO 9275.001 SN0101

PLOT DATE 2/21/92

SHEET 1 OF 2

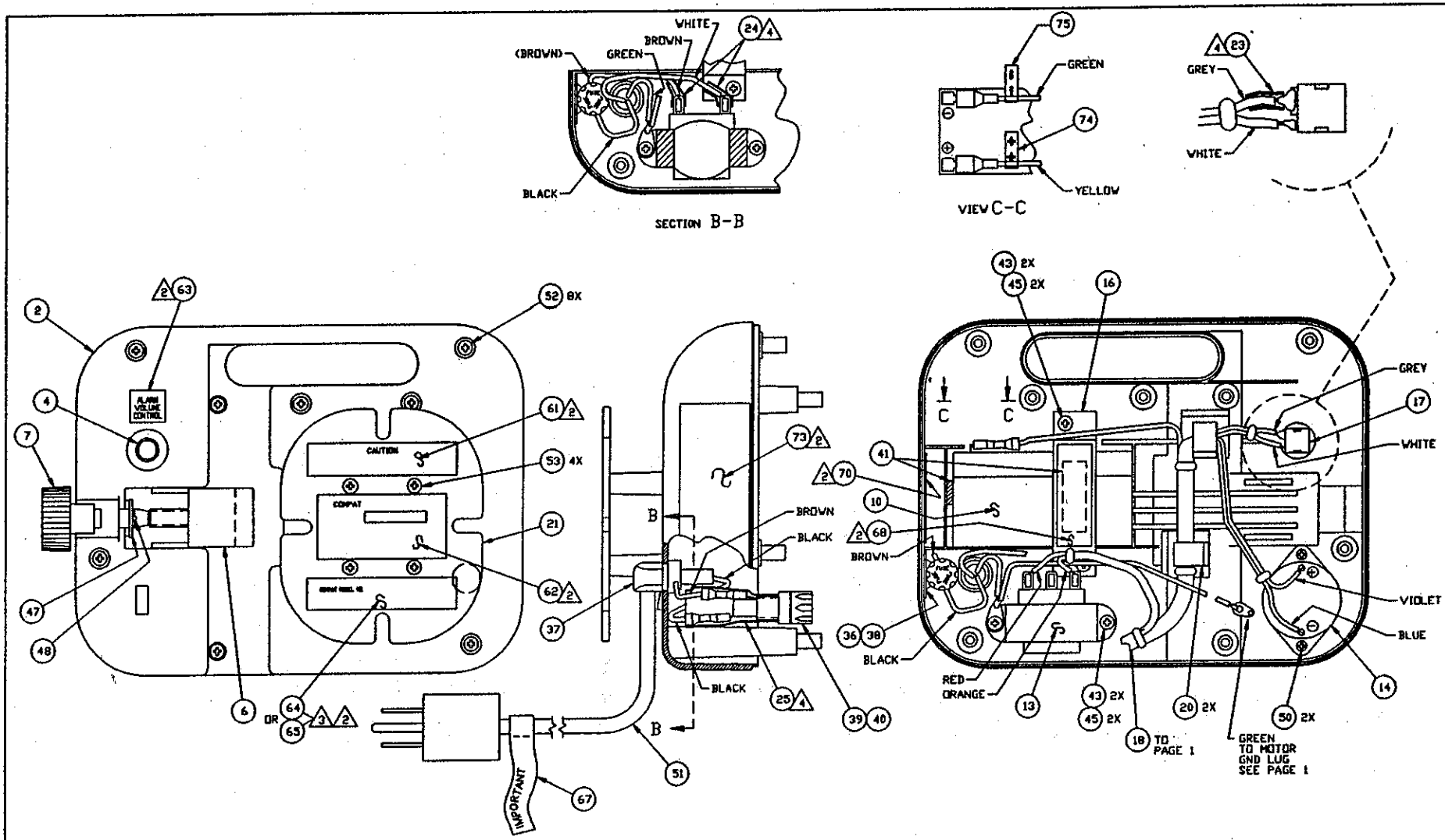

SANDOZ NUTRITION
P.O. BOX 370 MINNEAPOLIS, MINNESOTA 55440 612-525-2380

APPROVALS	DATE	INITIAL
DRW DWG BY	890216	FISHEL
SANDOZ APPROVAL		

NO.	REVISIONS	ECO	DATE	INITIAL
A	RELEASED	-	890509	BRANE
B	REVISED, MOVED LABELS	-	890827	BRANE
C	REVISED, ADDED BATTERY LABELS	-	920221	BRANE
-	-	-	-	-

SCALES SHOWN ABOVE

DRAWING TITLE: ASSY, FINAL, COMPAT

PROJECT NO. —

DRAWING NO. FILE NO 9275.001 SN0101

PLOT DATE 2/21/92

SHEET 2 of 2

A-12

MECHANICAL ASSEMBLY PARTS LIST

ITEM	DESCRIPTION	PART NO.	QUANTITY
1	ENCLOSURE, FRONT HALF	SN-102	1
2	ENCLOSURE, BACK HALF	SN-103	1
3	PUMP SPOOL ASSEMBLY	SN-105	1
4	KNOB	SN-103-7	1
6	BLOCK, CLAMP ASSEMBLY	SN-107	1
7	CLAMP ASSEMBLY	SN-108	1
9	SENSOR CLIP	SN-104	1
10	BATTERY, 12V, 1.2AH	SN-265	1
11	PHOTO TRANSISTOR	SN-266	1
13	TRANSFORMER 12.6V	SN-268	1
14	PIEZO SPEAKER	SN-269	1
15	PC BOARD ASSY.	SN-113	1
16	BRACKET, BATTERY	SN-110	1
17	POTENTIOMETER, 100K OHM	SN-271	1
18	HARNESS FOR CIRCUIT BD.	SN-111	1
19	HARNESS FOR STEPPER MOTOR	SN-112	1
20	WIRE HARNESS CLIPS	SN-103-9	3
21	POWER CORD PLATE	SN-106	1
22	KEYPAD, MEMBRANE	SN-114	1
23	SHRINK TUBING, 1/8"	SN-282	0.10 ft.
24	SHRINK TUBING, 3/16"	SN-283	0.33 ft.
25	SHRINK TUBING, 1/2"	SN-283-1	0.20 ft.
28	INFRARED, L.E.D.	SN-334	1

ITEM	DESCRIPTION	PART NO.	QUANTITY
31	SCREW 6-32X1/2,STAINLESS	SN-102-1	2
32	LOCK WASHER #6, STAINLESS	SN-102-3	2
35	SCREW, #4X5/16, TYPE B	SN-102-5	4
36	CABLE TIE WRAP	SN-330	1
37	STRAIN RELIEF	SN-281	1
38	ADHESIVE BACK PAD	SN-331	1
39	FUSE HOLDER	SN-277	1
40	FUSE, 1/4 AMP, 250 V	SN-278	1
41	FOAM STRIPS	SN-332	2
43	SCREW, 8-32 X 1/4"	SN-103-1	4
45	WASHER, LOCK, #8 SPLIT	SN-103-4	4
47	THRUST WASHER, .415 X.812	SN-109-3	1
48	ROLL PIN, .1"x.75"	SN-109-5	1
50	SCREW, ALARM, TYPE B	SN-103-5	2
51	HARNESS FOR POWER CORD	SN-140	1
52	SCREW, 8-32 X 7/8"	SN-102-7	8
53	SCREW, 8-32 X 3/8"	SN-103-11	4
60	LABEL, DANGER	SN-1000	1
61	LABEL, CAUTION	SN-1001	1
62	LABEL SERIAL NO.	SN-1002	1
63	LABEL, VOLUME, ALARM	SN-1003	1
64	LABEL, MODEL NO.	SN-1004	1
65	LABEL, MODEL NO., NO ALARM	SN-1005	1
66	LABEL, NOTICE	SN-1006	1

ITEM	DESCRIPTION	PART NO.	QUANTITY
67	LABEL, IMPORTANT	SN-1007	1
68	LABEL, WARNING, BATTERY	SN-1008	1
69	LABEL, FUSE, 2A	SN-1009	1
70	LABEL, FUSE 1/4A	SN-1010	1
71	LABEL, WARNING, FUSE	SN-1011	1
72	LABEL, DIREC., R, VIEW DOSE	SN-1013	1
73	LABEL, DIRECTION, L.PRESS	SN-1012	1
74	PLUS POLARITY INDICATOR	SN-1018	1
75	MINUS POLARITY INDICATOR	SN-1019	1

SANDOZ NUTRITION CORPORATION offers a full line of enteral delivery system products.

PRODUCT DESCRIPTION		CATALOG NO.
PUMPS		
Compat	Enteral Feeding Pump with Dose Limit and Memory.	199235
Compat	Enteral Feeding Pump with Dose Limit and Memory, No Hold Alarm.	199240
ADMINISTRATION SETS AND CONTAINERS		
Compat	Gravity Set with Piercing Spike.	199206
Compat	Pump Set with Piercing Spike	199207
Compat	500ml Top Fill Enteral Feeding Container with pre-attached Enteral Delivery GRAVITY SET.	199210
Compat	1000ml Top Fill Enteral Feeding Container with pre-attached Enteral Delivery GRAVITY SET.	199211
Compat	500ml Top Fill Enteral Feeding Container with pre-attached Enteral Delivery PUMP SET	199212
Compat	1000ml Top Fill Enteral Feeding Container with pre-attached Enteral Delivery PUMP SET	199213
Compat	Pump Set with 40mm Screw Cap	199219
I.V. POLE		
Compat	Portable I.V. Pole	199224

Should you have any questions about the compatibility or usage of COMPAT products or any other SANDOZ NUTRITION CORPORATION product call 1-800-333-3785 from anywhere in the United States or Canada or simply write to:

Sandoz Nutrition
P.O. Box 370
Minneapolis, MN 55440